QUINT4-PS/48-110DC/24DC/2.5/PT - DC/DC converter

1066708

https://www.phoenixcontact.com/gb/products/1066708

Please be informed that the data shown in this PDF document is generated from our online catalog. Please find the complete data in the user documentation. Our general terms of use for downloads are valid.



Primary-switched DC/DC converter, QUINT POWER DIN rail mounting, input: 48 V DC - 110 V DC, output: 24 V DC / 2.5 A

Product description

In the power range of up to 100 W, QUINT POWER provides superior system availability in the smallest size. Preventative function monitoring and exceptional power reserves are available for applications in the low-power range.

Your advantages

- Most powerful output side: easy system expansion, reliable heavy load startup and miniature circuit breaker tripping
- Most comprehensive signaling: preventive function monitoring reports critical operating states before errors occur
- Free selection between Push-in and screw connection

ELEKTROGERÄTE RÜCKNAHME

Commercial data

Item number	1066708
Packing unit	1 pc
Minimum order quantity	1 pc
Sales key	CMDI43
Product key	CMDI43
GTIN	4055626733838
Weight per piece (including packing)	300 g
Weight per piece (excluding packing)	240 g
Customs tariff number	85044095
Country of origin	CN

Technical data

Input data

Nominal input voltage range	48 V DC ... 110 V DC
Input voltage range	48 V DC ... 110 V DC -37,5 % ...+40 %
Wide-range input	yes
Electric strength, max.	160 V DC (60 s)
Inrush current	typ. 8 A
Inrush current integral (I^2t)	typ. 0.1 A^2s
Inrush current limitation	8 A
Mains buffering time	typ. 14 ms (48 V DC)
	typ. 17 ms (110 V DC)
Current consumption	typ. 1.7 A (48 V DC)
	typ. 0.75 A (110 V DC)
Switch-on time	< 1 s
Input fuse	4 A (slow-blow, internal)
Recommended breaker for input protection	10 A ... 16 A (Characteristic B, C, D, K or comparable)

Output data

Efficiency	typ. 93.7 % (110 V DC)
Output characteristic	U/I Advanced
Nominal output voltage	24 V DC
Setting range of the output voltage (U_{Set})	24 V DC ... 28 V DC (> 24 V DC, constant capacity)
Nominal output current (I_N)	2.5 A
Static Boost ($I_{Stat.Boost}$)	3.125 A (≤ 40 °C)
Dynamic Boost ($I_{Dyn.Boost}$)	5 A (≤ 60 °C (4.9 s))
Short-circuit-proof	yes
No-load proof	yes
Derating	> 60 °C (2.5%/K of P_{Out} nom.)
Output power (P_N)	60 W
Output power ($P_{Stat. Boost}$)	75 W
Output power ($P_{Dyn. Boost}$)	120 W
Feedback voltage resistance	≤ 35 V DC
Protection against overvoltage at the output (OVP)	≤ 32 V DC
Residual ripple	< 20 mV_{PP}
Control deviation static	< 1 % (change in load, static 10 % ... 90 %)
Control deviation dynamic	< 1 % (change in load, static 10 % ... 90 %)
Control deviation Input voltage change	< 1 % (change in load, static 10 % ... 90 %)
Rise time	< 1 s (U_{OUT} (10 % ... 90 %))
Connection in series	yes
Maximum no-load power dissipation	< 2.2 W
Power loss nominal load max.	< 4.8 W
Connection in parallel	yes, for redundancy and increased capacity

Fuse protection (secondary side)	electronic

Connection data

Input

Position	1.x

Conductor connection

Connection method	Push-in connection
rigid	0.2 mm² ... 2.5 mm²
flexible	0.25 mm² ... 2.5 mm²
flexible with ferrule without plastic sleeve	0.25 mm² ... 2.5 mm²
flexible with ferrule with plastic sleeve	0.25 mm² ... 2.5 mm²
rigid (AWG)	22 ... 14
Stripping length	10 mm

Output

Position	2.x

Conductor connection

Connection method	Push-in connection
rigid	0.5 mm² ... 2.5 mm²
flexible	0.5 mm² ... 2.5 mm²
flexible with ferrule without plastic sleeve	0.5 mm² ... 2.5 mm²
flexible with ferrule with plastic sleeve	0.5 mm² ... 2.5 mm²
rigid (AWG)	20 ... 14
Stripping length	10 mm

Signal

Position	3.x

Conductor connection

Connection method	Push-in connection
rigid	0.2 mm² ... 2.5 mm²
flexible	0.25 mm² ... 2.5 mm²
flexible with ferrule without plastic sleeve	0.25 mm² ... 2.5 mm²
flexible with ferrule with plastic sleeve	0.25 mm² ... 2.5 mm²
rigid (AWG)	24 ... 14
Stripping length	10 mm

Signaling

LED signaling

Signal threshold	> P_{Thr} (LED lights up yellow, output power > P_{Thr}, depending on the rotary selector switch setting)
	> 0.9 x U_{Set} (LED lights up green)
	< 0.9 x U_{Set} (LED flashes green)

Signal output Configurable

Digital	0 V DC
	24 V DC
	22 mA
Default	24 V DC
	22 mA
	24 V DC for U_{Out} > 0.9 x U_{Set}

Electrical properties

Number of phases	1.00
Insulation voltage input/output	2.6 kV DC (type test)
	1.2 kV DC (routine test)
Switching frequency	130.00 kHz ... 130.00 kHz (Auxiliary converter stage)
	70.00 kHz ... 250.00 kHz (Main converter stage)

Product properties

Product type	DC/DC converters
Product family	QUINT POWER
MTBF (IEC 61709, SN 29500)	> 1200000 h (25 °C)
	> 618000 h (40 °C)
	> 230000 h (60 °C)

Insulation characteristics

Protection class	II
Overvoltage category (EN 61010-1)	II (≤ 5000 m)
Overvoltage category (EN 62477-1)	III (≤ 2000 m)
Degree of pollution	2

Life expectancy (electrolytic capacitors)

Current	2.5 A
Temperature	40 °C
Time	171000 h
Additional text	24 V DC

Life expectancy (electrolytic capacitors)

Current	2.5 A
Temperature	30 °C
Time	343000 h
Additional text	24 V DC

Dimensions

Item dimensions

Width	32 mm
Height	106 mm
Depth	90 mm

Item dimensions with alternative mounting

Width	90 mm
Height	106 mm
Depth	32 mm

Installation dimensions

Installation distance right/left (active)	15 mm / 15 mm (P_{Out} ≥50%)
Installation distance right/left (passive)	5 mm / 5 mm (P_{Out} ≥50%)
Installation distance right/left (active, passive)	0 mm / 0 mm (P_{Out} ≤50 %)
Installation distance top/bottom (active)	30 mm / 30 mm (P_{Out} ≥50%)
Installation distance top/bottom (passive)	30 mm / 30 mm (P_{Out} ≥50%)
Installation distance top/bottom (active, passive)	30 mm / 30 mm (P_{Out} ≤50 %)

Mounting

Mounting type	DIN rail mounting
Assembly note	alignable: P_N ≥50%, 5 mm horizontally, 15 mm next to active components, 50 mm vertically alignable: P_N <50%, 0 mm horizontally, 40 mm vertically top, 20 mm vertically bottom
With protective coating	no

Material specifications

Flammability rating according to UL 94 (housing / terminal blocks)	V0
Housing material	Plastic
Type of housing	Polycarbonate (PC), UL 94 V0

Environmental and real-life conditions

Ambient conditions

Degree of protection	IP20
Ambient temperature (operation)	-25 °C ... 70 °C (> 60 °C Derating: 2,5 %/K)
Ambient temperature (storage/transport)	-40 °C ... 85 °C
Ambient temperature (start-up type tested)	-40 °C
Maximum altitude	≤ 5000 m (> 2000 m, observe derating)
Climatic class	3K3 (in acc. with EN 60721)
Max. permissible relative humidity (operation)	≤ 95 % (at 25 °C, non-condensing)
Shock	18 ms, 30g, in each space direction (according to IEC 60068-2-27)
Vibration (operation)	< 15 Hz, ±2.5 mm amplitude; 15 Hz ... 100 Hz: 2.3 g 90 Min. (in accordance with IEC 60068-2-6)
Temp code	T4 (-25 ... +70 °C; > 60 °C, Derating: 2,5 %/K)

Standards and regulations

Fire protection in rail vehicles

Standard designation	Fire protection in rail vehicles

Standards/specifications	EN 45545-2 (HL3)

Safety for measurement, control, and laboratory equipment

Standard designation	Electrical safety (of control and regulation devices)
Standards/specifications	IEC 61010-1

Protective extra-low voltage

Standard designation	Protective extra-low voltage
Standards/specifications	IEC 61010-1 (SELV)

Mains voltage dips

Standard designation	Mains variation/undervoltage
Standards/specifications	EN 61000-4-29

Approvals

UL

Identification	UL Listed UL 61010-1

UL

Identification	UL Listed UL 61010-2-201

UL

Identification	UL 121201 & CSA C22.2 No. 213-17 Class I, Division 2, Groups A, B, C, D T4 (Hazardous Location)

CSA

Identification	CAN/CSA C22.2 No. 61010-1-12

CSA

Identification	CAN/CSA C22.2 No. 61010-2-201:18

SIQ

Identification	CB scheme (IEC 61010-1, IEC 61010-2-201)

Shipbuilding

Identification	DNV GL

EMC data

Electromagnetic compatibility	Conformance with EMC Directive 2014/30/EU
EMC requirements for noise emission	EN 61000-6-3
	EN 61000-6-4
EMC requirements for noise immunity	EN 61000-6-1
	EN 61000-6-2
EMC requirements, power plant	EN 61850-3
	EN 61000-6-5

Conducted noise emission

Standards/regulations	EN 55016
	EN 61000-6-3 (Class B)

Noise emission

Standards/regulations	Additional basic standard EN 61000-6-5 (immunity in switching devices), IEC/EN 61850-3 (power supply)

Noise emission

Standards/regulations	EN 55016
	EN 61000-6-3 (Class B)

DNV GL conducted noise emissions

DNV	Class B
Additional text	Bridge and deck area

DNV GL noise radiation

DNV	Class B
Additional text	Bridge and deck area

Electrostatic discharge

Standards/regulations	EN 61000-4-2

Electrostatic discharge

Contact discharge	8 kV (Test Level 4)
Discharge in air	15 kV (Test Level 4)
Comments	Criterion A

Electromagnetic HF field

Standards/regulations	EN 61000-4-3

Electromagnetic HF field

Frequency range	80 MHz ... 1 GHz
Test field strength	20 V/m (Test Level 3)
Frequency range	1 GHz ... 6 GHz
Test field strength	10 V/m (Test Level 3)
Comments	Criterion A

Fast transients (burst)

Standards/regulations	EN 61000-4-4

Fast transients (burst)

Input	2 kV (Test Level 4 - asymmetrical)
Output	2 kV (Test Level 4 - asymmetrical)
Signal	2 kV (Test Level 4 - asymmetrical)
Comments	Criterion B

Surge voltage load (surge)

Standards/regulations	EN 61000-4-5

Surge voltage load (surge)

Input	1 kV (Test Level 4 - symmetrical)
	2 kV (Test Level 4 - asymmetrical)

Output	1 kV (Test Level 3 - symmetrical)
	2 kV (Test Level 3 - asymmetrical)
Signal	1 kV (Test Level 4 - symmetrical)
	2 kV (Test Level 4 - asymmetrical)
Comments	Criterion A

Conducted interference

Standards/regulations	EN 61000-4-6

Conducted interference

Input/output/signal	asymmetrical
Frequency range	0.15 MHz ... 80 MHz
Comments	Criterion A
Voltage	10 V (Test Level 3)

Power frequency magnetic field

Standards/regulations	EN 61000-4-8
Frequency	16.67 Hz
	50 Hz
	60 Hz
Test field strength	100 A/m
Additional text	60 s
Comments	Criterion A
Frequency	50 Hz
	60 Hz
Frequency range	50 Hz ... 60 Hz
Test field strength	1 kA/m
Additional text	3 s
Frequency	0 Hz
Test field strength	300 A/m
Additional text	DC, 60 s

Voltage dips

Standards/regulations	EN 61000-4-29
Voltage	48 V DC
Voltage dip	70 %
Number of periods	0.5 / 1 / 25 periods
Time	100 ms
Additional text	Test Level 2
Comments	Criterion A
Voltage dip	40 %
Number of periods	5 / 10 / 50 periods
Time	100 ms
Additional text	Test Level 2
Comments	Criterion B
Voltage dip	0 %

Number of periods	0.5 / 1 / 5 / 50 periods
Time	50 ms
Additional text	Test Level 2
Comments	Criterion B

Pulse-shape magnetic field

Standards/regulations	EN 61000-4-9
Test field strength	1000 A/m
Comments	Criterion A

Asymmetrical conducted disturbance variables

Standards/regulations	EN 61000-4-16
Test level 1	15 Hz 150 Hz (Test Level 3)
Voltage	10 V 1 V (Permanent)
Test level 2	150 Hz 1.5 kHz (Test Level 3)
Voltage	1 V
Test level 3	1.5 kHz 15 kHz (Test Level 3)
Voltage	1 V 10 V
Test level 4	15 kHz 150 kHz (Test Level 3)
Voltage	10 V
Test level 5	16.7 Hz 50 Hz 60 Hz 150 Hz 180 Hz (Test Level 3)
Voltage	10 V (Permanent)
Test level 6	0 Hz 16.7 Hz 50 Hz 60 Hz (Test Level 3)
Voltage	100 V (1 s)
Comments	Criterion A

Alternating component of direct voltage

Standards/regulations	EN 61000-4-17
Alternating component	10 % (U_N)
Frequency	50 Hz
	100 Hz
	150 Hz
	300 Hz
Comments	Criterion A

Attenuated oscillating wave

Standards/regulations	EN 61000-4-18
Input, output (test level 1)	1 MHz (Test Level 2 - symmetrical)
Voltage	0.5 kV
Input, output (test level 2)	1 MHz (Test Level 2 - asymmetrical)
Voltage	1 kV
Signals (test level 1)	1 MHz (Test Level 2 - symmetrical)
Voltage	0.5 kV
Signals (test level 2)	1 MHz (Test Level 2 - asymmetrical)
Voltage	1 kV
Comments	Criterion A

Attenuated oscillating magnetic field

Standards/regulations	EN 61000-4-10
Test field strength	100 A/m
Test level 1	100 kHz
Test field strength	100 A/m
Test level 2	1 MHz
Comments	Criterion A

Criteria

Criterion A	Normal operating behavior within the specified limits.
Criterion B	Temporary impairment to operational behavior that is corrected by the device itself.
Criterion C	Temporary adverse effects on the operating behavior, which the device corrects automatically or which can be restored by actuating the operating elements.

Drawings

Dimensional drawing

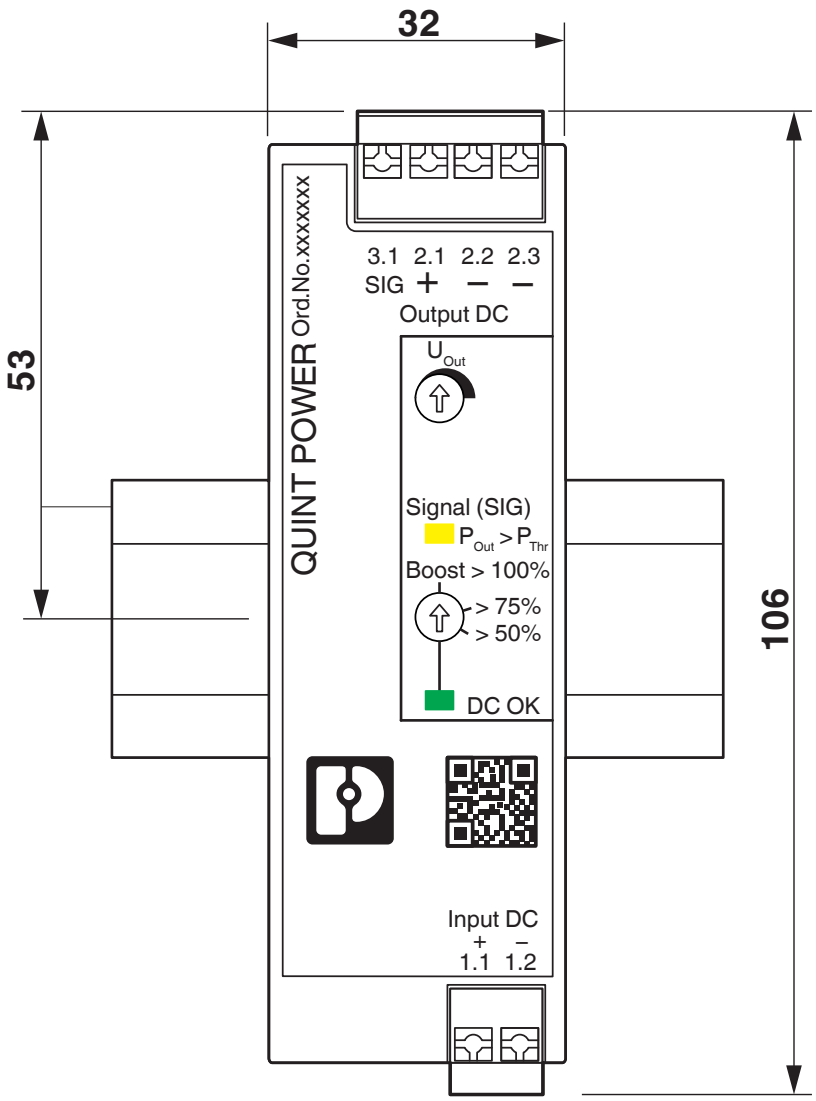

Schematic diagram

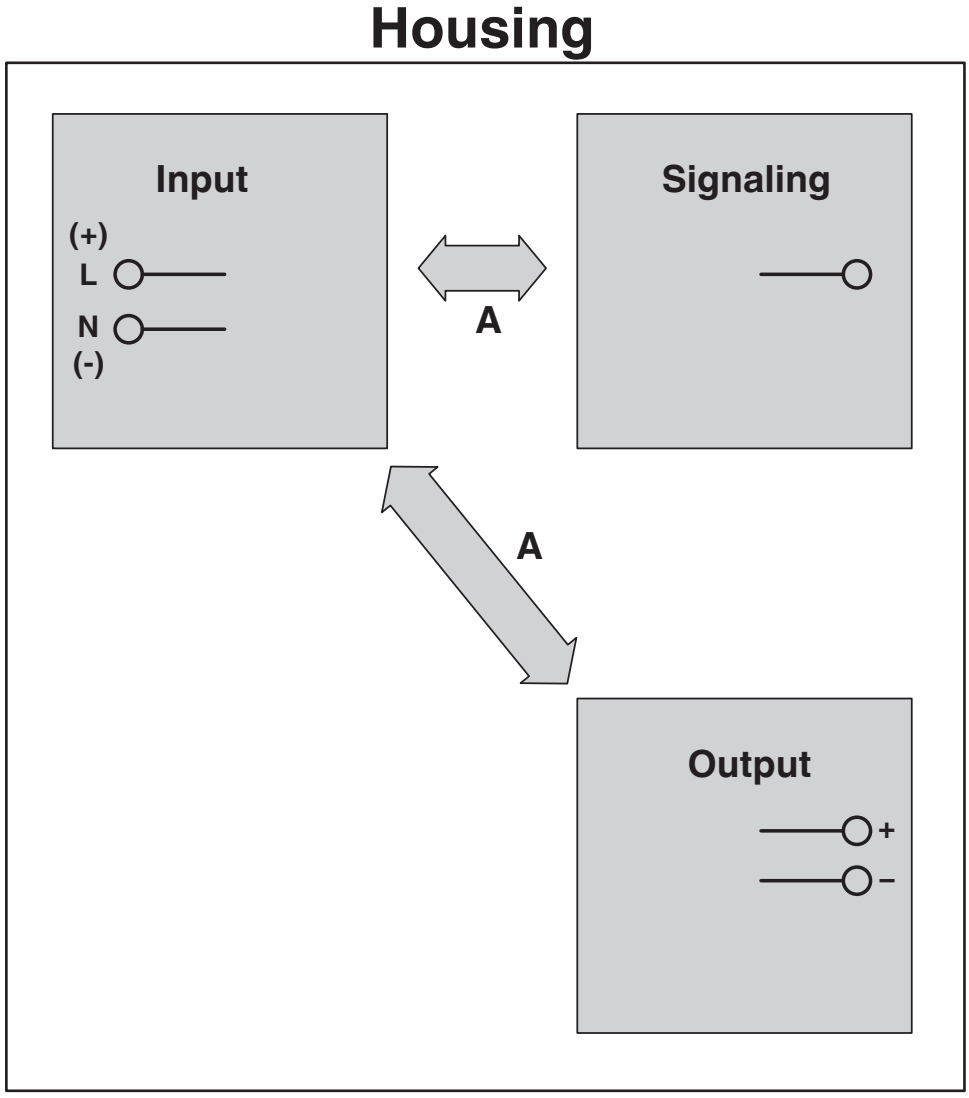

Diagram

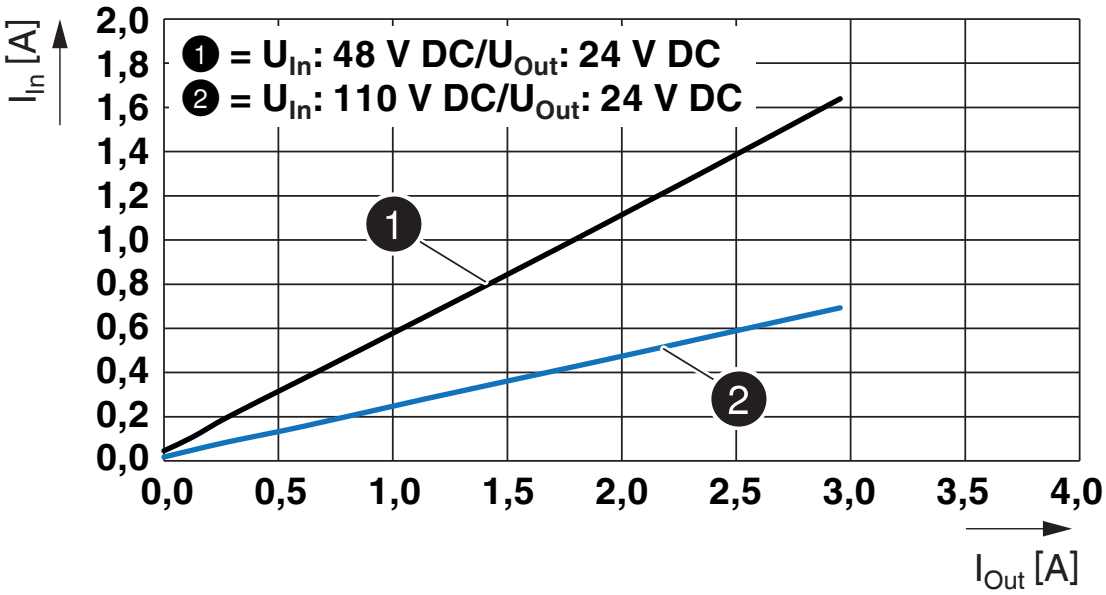

Diagram

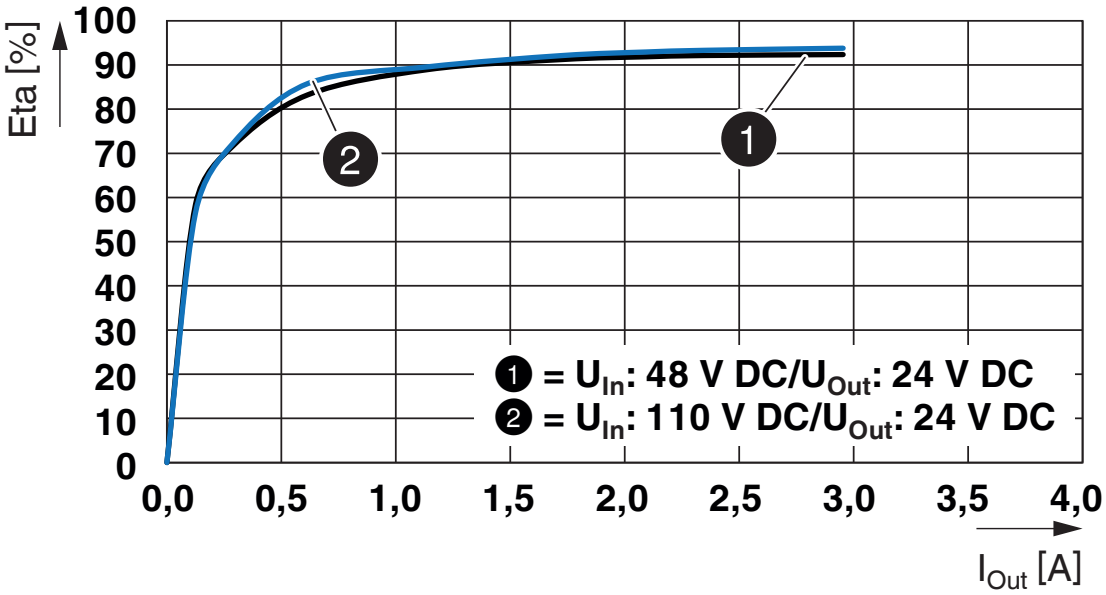

Block diagram

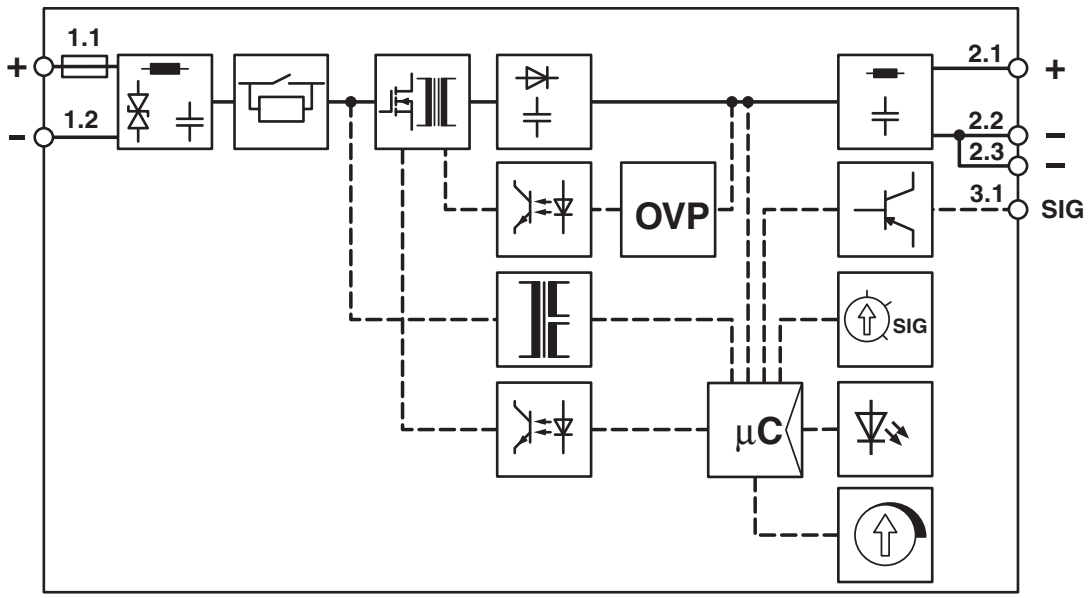

Approvals

To download certificates, visit the product detail page: https://www.phoenixcontact.com/gb/products/1066708

IECEE CB Scheme
Approval ID: DK-97315-UL

IECEE CB Scheme
Approval ID: DE/PTZ/0122

cULus Listed
Approval ID: FILE E 123528

DNV
Approval ID: TAA00001YD

EAC
Approval ID: RU S-DE.BL08.W.00764

EAC
Approval ID: KZ7500651 0101 12535

cULus Listed
Approval ID: FILE E 199827

Classifications

ECLASS

ECLASS-13.0	27040701
ECLASS-15.0	27040701

ETIM

ETIM 10.0	EC002540

UNSPSC

UNSPSC 21.0	39121000

Environmental product compliance

EU RoHS

Fulfills EU RoHS substance requirements	Yes
Exemption	7(a), 7(c)-I

China RoHS

Environment friendly use period (EFUP)	EFUP-25
	An article-related China RoHS declaration table can be found in the download area for the respective article under "Manufacturer declaration". For all articles with EFUP-E, no China RoHS declaration table issued and required.

EU REACH SVHC

REACH candidate substance (CAS No.)	Lead(CAS: 7439-92-1)
SCIP	7d1d455e-a3ec-434c-9d90-27c3e3ebafea

EF3.1 Climate Change

CO2e kg	13.37 kg CO2e

Phoenix Contact 2026 © - all rights reserved
https://www.phoenixcontact.com

PHOENIX CONTACT Ltd
Halesfield 13, Telford
Shropshire, TF7 4PG
01952 681700
info@phoenixcontact.co.uk