# TRIO-PS67/1AC/24DC/8/INC - Power supply

1065976

https://www.phoenixcontact.com/gb/products/1065976

Please be informed that the data shown in this PDF document is generated from our online catalog. Please find the complete data in the user documentation. Our general terms of use for downloads are valid.



Primary-switched power supply unit TRIO POWER IP67, 7/8″ circular connector, Panel mounting, input: 1-phase, output: 24 V DC / 8 A

## Product description

TRIO POWER 8 A power supplies with IP67 degree of protection have a floating switch contact and offer expanded diagnostic options. Safe starting of heavy loads is made possible through the dynamic boost of 150% for 5 s.

## Your advantages

- The AC OK LED and DC OK LED provide a direct diagnostic option
- Reliable start-up even with heavy loads through the dynamic boost of up to 150% for 5 s
- Safe installation with 7/8″ circular connectors
- Direct installation at the load in the field reduces cable lengths and saves space in the control cabinet
- Reliable use with high shock resistance, vibration resistance, and electric strength
- Robust die-cast aluminum housing with IP67 degree of protection ensures reliable protection against dust and water

ELEKTROGERÄTE RÜCKNAHME

## Commercial data

| | |
|---|---|
| Item number | 1065976 |
| Packing unit | 1 pc |
| Minimum order quantity | 1 pc |
| Sales key | CMPF13 |
| Product key | CMPF13 |
| GTIN | 4055626731032 |
| Weight per piece (including packing) | 1,753 g |

| | |
|---|---|
| Weight per piece (excluding packing) | 1,312 g |
| Customs tariff number | 85044095 |
| Country of origin | CN |

# Technical data

## Input data

AC operation

| | |
|---|---|
| Supply system configuration | Star network (TN, TT, IT (PE)) |
| Nominal input voltage range | 100 V AC ... 240 V AC |
| Input voltage range | 100 V AC ... 240 V AC ±10 % |
| Switch-on voltage | > 75 V AC |
| Shut-down voltage | < 70 V AC |
| Electric strength, max. | ≤ 300 V AC 15 s |
| Typical national grid voltage | 120 V AC |
| | 230 V AC |
| Voltage type of supply voltage | AC |
| Inrush current | ≤ 25 A (typical) |
| Inrush current integral ($I^2t$) | < 0.5 $A^2s$ |
| Inrush current limitation | typ. 25 A (after 1 ms) |
| AC frequency range | 50 Hz ... 60 Hz ±10 % |
| Frequency range ($f_N$) | 50 Hz ... 60 Hz ±10 % |
| Mains buffering time | > 15 ms (120 V AC) |
| | > 15 ms (230 V AC) |
| Current consumption | 2.2 A (100 V AC) |
| | 0.9 A (240 V AC) |
| Nominal power consumption | 285 VA |
| Protective circuit | Transient surge protection; Varistor |
| Power factor | > 93 |
| Switch-on time | < 1 s |
| Input fuse | 6.3 A (internal (device protection)) |
| Recommended breaker for input protection | 6 A ... 16 A (US/CAN: branch circuit protection ≤ ⎍⎍⬇ A) (Characteristic B, C, D, K or comparable) |
| Discharge current to PE | < 3.5 mA |

DC operation

| | |
|---|---|
| Nominal input voltage range | 110 V DC ... 250 V DC |
| Input voltage range | 110 V DC ... 250 V DC ±10 % |
| Switch-on voltage | ≥ 95 V DC |
| Shut-down voltage | < 95 V DC |
| Voltage type of supply voltage | DC |
| Mains buffering time | > 15 ms |
| Current consumption | 1.9 A (110 V DC) |
| | 0.8 A (250 V DC) |
| Power factor | > 93 |

## Output data

| | |
|---|---|
| Efficiency | typ. 91 % (120 V AC) |
| | typ. 92 % (230 V AC) |
| Nominal output voltage | 24 V DC ±1 % (SELV) |
| Nominal output current ($I_N$) | 8 A |
| Dynamic Boost ($I_{Dyn.Boost}$) | 12 A (5 s) |
| Derating | > 60 °C ... 70 °C (2.5 %/K) |
| Feedback voltage resistance | ≤ 35 V DC |
| Protection against overvoltage at the output (OVP) | ≤ 30 V DC |
| Control deviation | < 1 % (change in load, static 10 % ... 90 %) |
| | < 3 % (Dynamic load change 10 % ... 90 %, 10 Hz) |
| | < 0.1 % (change in input voltage ±10 %) |
| Residual ripple | ≤ 10 $mV_{PP}$ |
| Short-circuit-proof | yes |
| No-load proof | yes |
| Output power | 192 W |
| | 288 W |
| Maximum no-load power dissipation | < 8 W (120 V AC) |
| | < 5 W (230 V AC) |
| Power loss nominal load max. | < 18 W (120 V AC) |
| | < 14 W (230 V AC) |
| Rise time | ≤ 12 ms ($U_{OUT}$ (10 % ... 90 %)) |
| Connection in parallel | yes, for redundancy and increased capacity |
| Connection in series | yes |
| Fuse protection (secondary side) | electronic |

Signal: DC OK

| | |
|---|---|
| Maximum switching voltage | 30 V AC/DC |
| Continuous load current | 100 mA |

Signal relay 13/14

| | |
|---|---|
| Default | closed |
| Digital | 30 V AC 30 V DC 100 mA |

## Connection data

Input

| | |
|---|---|
| Connection method | 7/8″ circular connector |
| Type of locking | Screw locking mechanism |
| Number of positions | 3 |

Output

| | |
|---|---|
| Connection method | 7/8″ circular connector |
| Type of locking | Screw locking mechanism |
| Number of positions | 4 |

Signal

| | |
|---|---|
| Connection method | M12 circular connector |
| Coding | A |
| Type of locking | M12 |
| Number of positions | 5 |

## Signaling

| | |
|---|---|
| Types of signaling | LED |
| | Floating signal contact |
| Status display | 2 x LED (green) |

Signal output: LED status indicator

| | |
|---|---|
| Signalization designation | AC OK |
| Status display | LED |
| Color | green |
| AC OK | $AC_{In}$ > 0.55 x $AC_N$ ($AC_N$ = 90 V AC) |

Signal output: LED status indicator

| | |
|---|---|
| Signalization designation | DC OK |
| Status display | LED |
| Color | green |
| DC OK | $U_{OUT}$ > 0.9 x $U_N$ ($U_N$ = 24 V DC) |
| 13/14 | $U_{OUT}$ > 0.9 x $U_N$ ($U_N$ = 24 V DC) |

## Electrical properties

| | |
|---|---|
| Number of phases | 1 |
| Insulation voltage input/output | 3 kV AC (type test) |
| | 1.5 kV AC (routine test) |

## Product properties

| | |
|---|---|
| Product type | Power supply |
| Product family | TRIO POWER IP67 |
| MTBF (IEC 61709, SN 29500) | > 1200000 h (25 °C) |
| | > 700000 h (40 °C) |
| | > 300000 h (60 °C) |

Insulation characteristics

| | |
|---|---|
| Protection class | I |
| Overvoltage category (EN 61010-1) | III (≤ 2000 m) |
| | II (≤ 4000 m) |
| Pollution degree | 2 (IEC 61010-1) |

## Dimensions

Item dimensions

| | |
|---|---|
| Width | 136 mm |
| Height | 240 mm |

| | |
|---|---|
| Depth | 53 mm |

Drill hole

| | |
|---|---|
| Diameter | 5.6 mm |

Installation dimensions

| | |
|---|---|
| Installation distance right/left | 10 mm / 10 mm |
| Installation distance top/bottom | 0 mm / 100 mm |

## Mounting

| | |
|---|---|
| Mounting type | Panel mounting |
| With protective coating | no |

## Material specifications

| | |
|---|---|
| Flammability rating according to UL 94 (housing / terminal blocks) | V0 |
| Housing material | Metal |
| Type of housing | Aluminum (AlMg3) |

## Environmental and real-life conditions

Ambient conditions

| | |
|---|---|
| Degree of protection | IP67 |
| Ambient temperature (operation) | -25 °C ... 70 °C (Derating >60°C: 2.5 %/K) |
| Ambient temperature (storage/transport) | -40 °C ... 85 °C |
| Ambient temperature (start-up type tested) | -40 °C |
| Maximum altitude | ≤ 4000 m (> 2000 m, Derating: 10 %/1000 m) |
| Climatic class | 4K26 (EN 60721-3-4) |
| Max. permissible relative humidity (operation) | ≤ 100 % (at 25 °C, non-condensing) |
| Permissible humidity (operation) | ≤ 100 % (at 25 °C, non-condensing) |
| Shock | 18 ms, 30g, in each space direction (according to IEC 60068-2-27) |
| Vibration (operation) | < 15 Hz, amplitude ±2.5 mm (according to IEC 60068-2-6) |
| | 15 Hz ... 150 Hz, 4g, 90 min. |

## Standards and regulations

Electrical safety

| | |
|---|---|
| Standard designation | Electrical safety |
| Standards/specifications | IEC 61010-1 |

Protective extra-low voltage

| | |
|---|---|
| Standard designation | Protective extra-low voltage |
| Standards/specifications | IEC 61010-1 |
| | IEC 61010-2-201 (SELV) |

Safe isolation

| | |
|---|---|
| Standard designation | Safe isolation |

| | |
|---|---|
| Standards/specifications | IEC 61558-2-16 |

Low-voltage power supplies, DC output

| | |
|---|---|
| Standard designation | Low-voltage power supplies, DC output |
| Standards/specifications | EN 61204-3 |

Safety requirements for electrical equipment for measurement, control, and laboratory use

| | |
|---|---|
| Standard designation | Safety requirements for electrical equipment for measurement, control, and laboratory use |
| Standards/specifications | IEC 61010-1 |

Limit values for harmonic currents

| | |
|---|---|
| Standard designation | Limit values for harmonic currents |
| Standards/specifications | EN 61000-3-2 |

Degrees of protection provided by enclosures (IP code)

| | |
|---|---|
| Standard designation | Degrees of protection provided by enclosures (IP code) |
| Standards/specifications | EN/IEC 60529 |

## Approvals

UL

| | |
|---|---|
| Identification | UL/C-UL Listed UL 61010-1 |

UL

| | |
|---|---|
| Identification | UL/C-UL Listed UL 61010-2-201 |

## EMC data

| | |
|---|---|
| Electromagnetic compatibility | Conformance with EMC Directive 2014/30/EU |
| Low Voltage Directive | Conformance with Low Voltage Directive 2014/35/EC |
| Interference emission | Interference emission in accordance with EN 61000-6-3 (residential and commercial) and EN 61000-6-4 (industrial) |
| Noise immunity | Immunity in accordance with EN 61000-6-1 (residential), EN 61000-6-2 (industrial) |

Conducted noise emission

| | |
|---|---|
| Standards/regulations | EN 55016 |
| | EN 61000-6-3 (Class B) |

Noise emission

| | |
|---|---|
| Standards/regulations | EN 55011 (EN 55022) |

Noise emission

| | |
|---|---|
| Standards/regulations | EN 55016 |
| | EN 61000-6-3 (Class B) |

Harmonic currents

| | |
|---|---|
| Standards/regulations | EN 61000-3-2 |
| | EN 61000-3-2 (Class A) |

Electrostatic discharge

| | |
|---|---|
| Standards/regulations | EN 61000-4-2 |

Electrostatic discharge

| | |
|---|---|
| Contact discharge | 6 kV (Test Level 3) |
| Comments | Criterion A |

Electromagnetic HF field

| | |
|---|---|
| Standards/regulations | EN 61000-4-3 |

Electromagnetic HF field

| | |
|---|---|
| Frequency range | 80 MHz ... 1 GHz |
| Test field strength | 10 V/m (Test Level 3) |
| Frequency range | 1 GHz ... 2 GHz |
| Test field strength | 10 V/m (Test Level 3) |
| Frequency range | 2 GHz ... 6 GHz |
| Test field strength | 10 V/m (Test Level 3) |
| Comments | Criterion A |

Fast transients (burst)

| | |
|---|---|
| Standards/regulations | EN 61000-4-4 |

Fast transients (burst)

| | |
|---|---|
| Input | 4 kV (Test Level 3 - asymmetrical) |
| Output | 2 kV (Test Level 3 - asymmetrical) |
| Signal | 2 kV (Test Level 3 - asymmetrical) |
| Comments | Criterion A |

Surge voltage load (surge)

| | |
|---|---|
| Standards/regulations | EN 61000-4-5 |

Surge voltage load (surge)

| | |
|---|---|
| Input | 2 kV (Test Level 4 - symmetrical) |
| | 4 kV (Test Level 4 - asymmetrical) |
| Output | 1 kV (Test Level 3 - symmetrical) |
| | 2 kV (Test Level 3 - asymmetrical) |
| Signal | 1 kV (Test Level 2 - asymmetrical) |
| Comments | Criterion A |

Conducted interference

| | |
|---|---|
| Standards/regulations | EN 61000-4-6 |

Conducted interference

| | |
|---|---|
| Input/Output | asymmetrical |
| Frequency range | 0.15 MHz ... 80 MHz |
| Comments | Criterion A |
| Voltage | 10 V (Test Level 3) |

Voltage dips

| | |
|---|---|
| Standards/regulations | EN 61000-4-11 |
| Voltage | 230 V AC |
| Frequency | 50 Hz |
| Voltage dip | 70 % |
| Number of periods | 25 periods |
| Comments | Criterion A |
| Voltage dip | 40 % |
| Number of periods | 10 periods |
| Comments | Criterion A |
| Voltage dip | 0 % |
| Number of periods | 1 period |
| Comments | Criterion A |

Emitted interference

| | |
|---|---|
| Standards/regulations | EN 61000-6-3 |
| Radio interference voltage in acc. with EN 55011 | EN 55011 (EN 55022) Class B, area of application: Industry and residential |
| Emitted radio interference in acc. with EN 55011 | EN 55011 (EN 55022) Class B, area of application: Industry and residential |

Criteria

| | |
|---|---|
| Criterion A | Normal operating behavior within the specified limits. |
| Criterion B | Temporary impairment to operational behavior that is corrected by the device itself. |
| Criterion C | Temporary adverse effects on the operating behavior, which the device corrects automatically or which can be restored by actuating the operating elements. |

## Drawings

Dimensional drawing

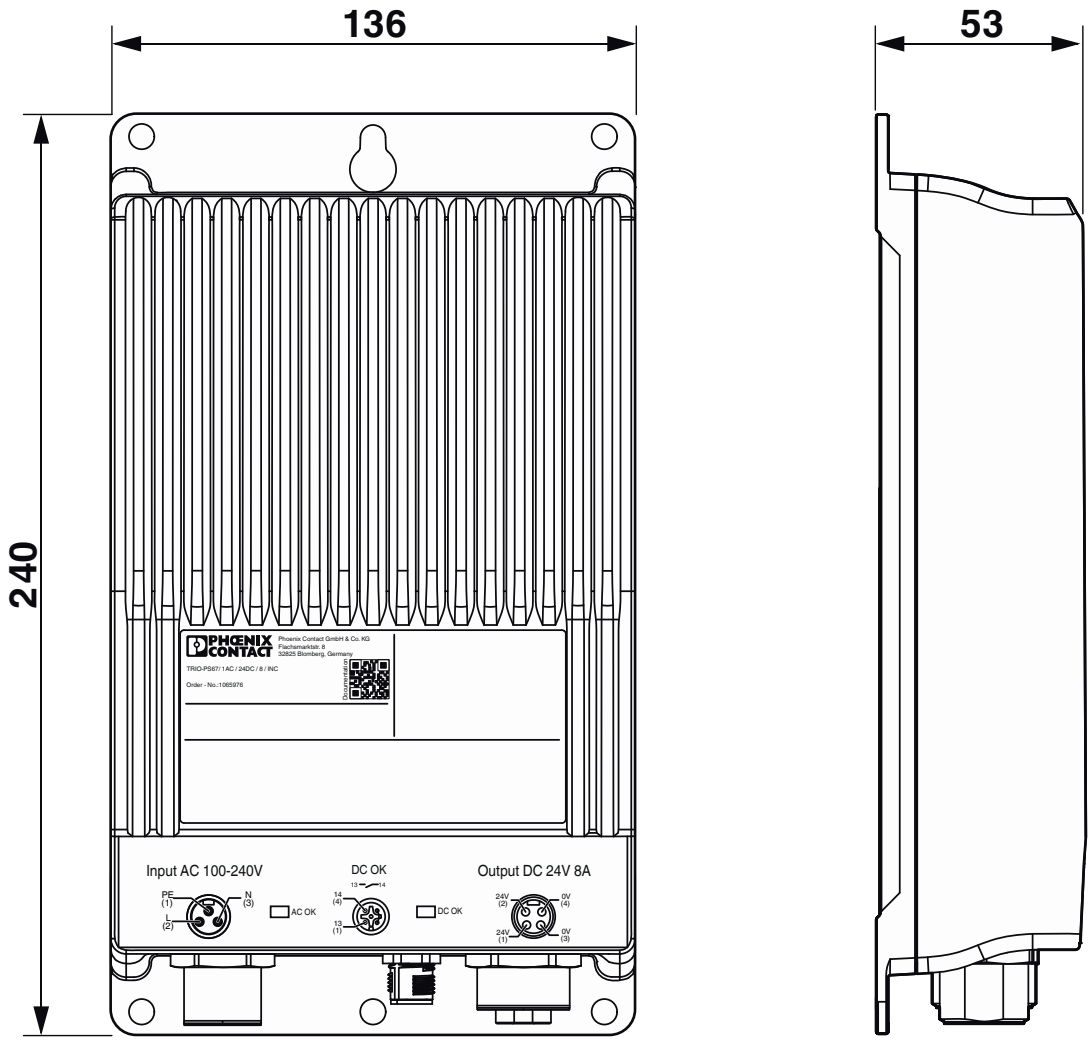


Device dimensions (dimensions in mm)

Diagram

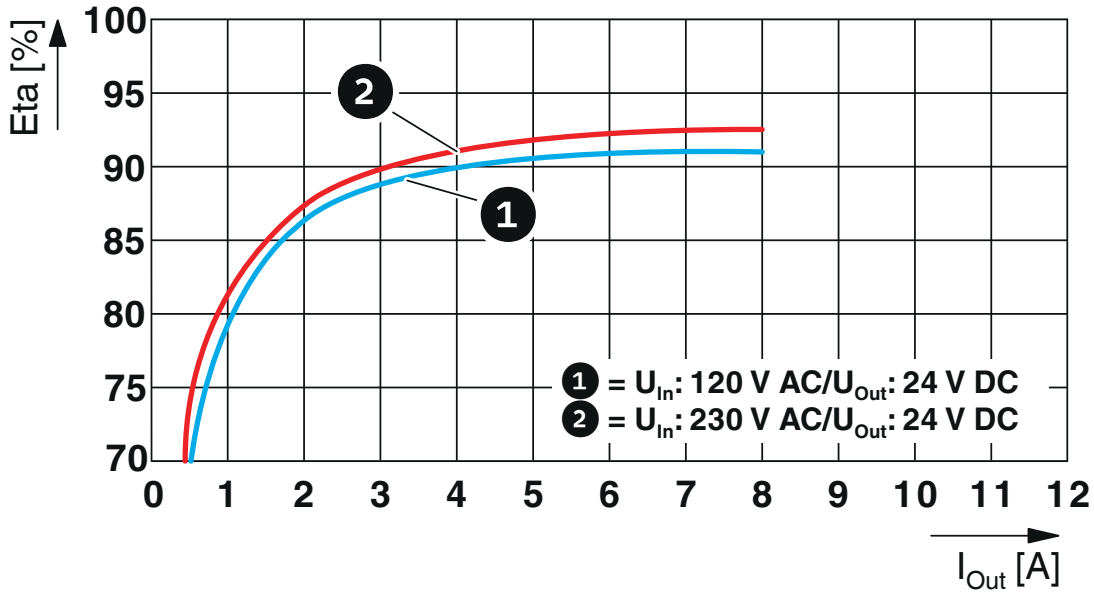


Efficiency

Diagram

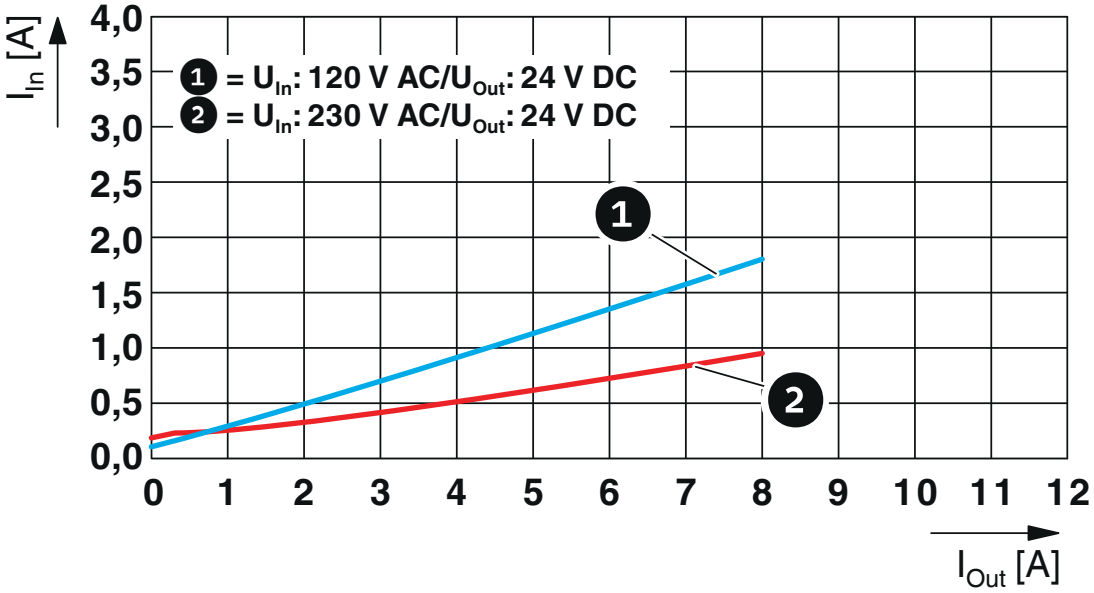


Input current/output current

Diagram

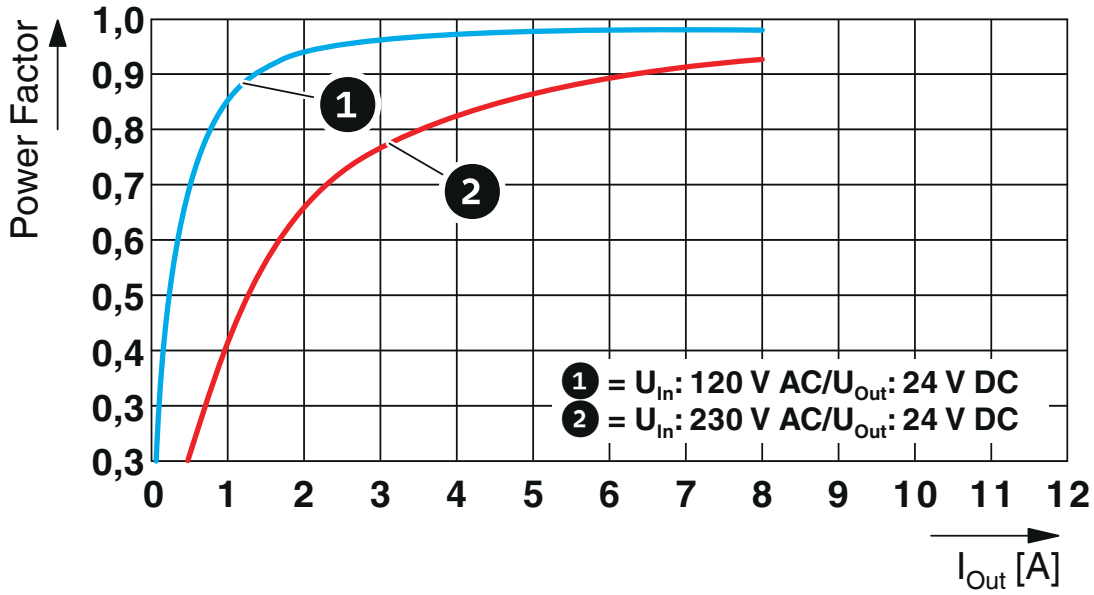


Power factor

Diagram

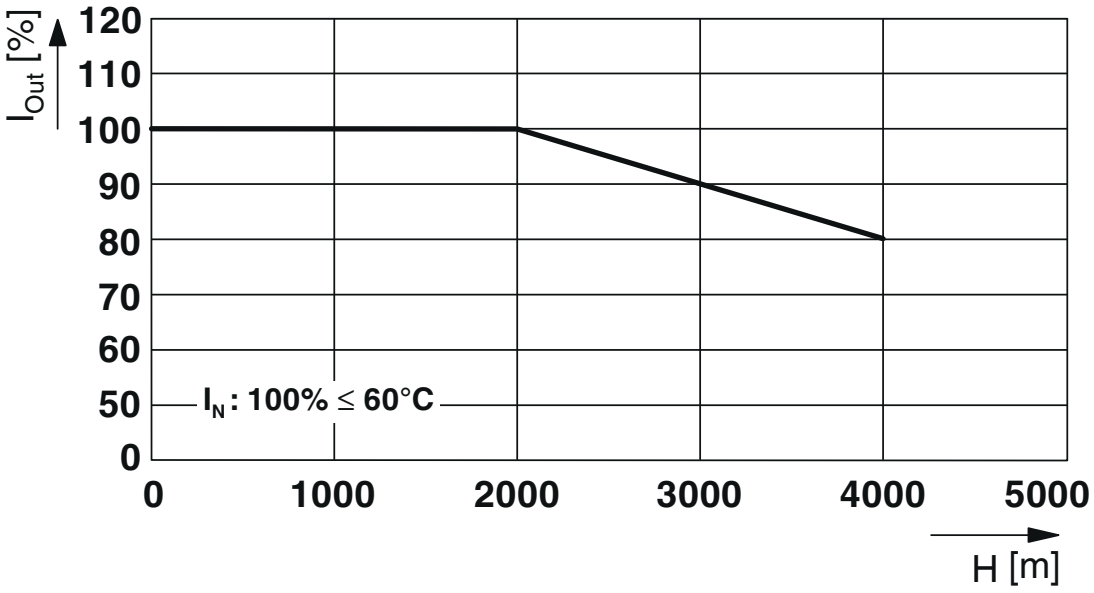


Output current/installation altitude

Diagram

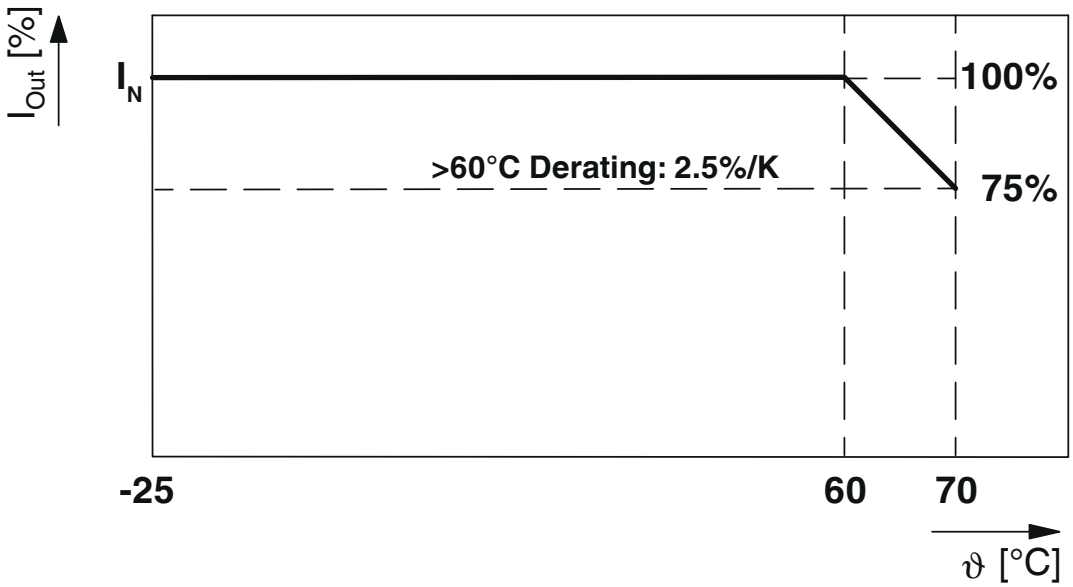


Output current/ambient temperature

Block diagram

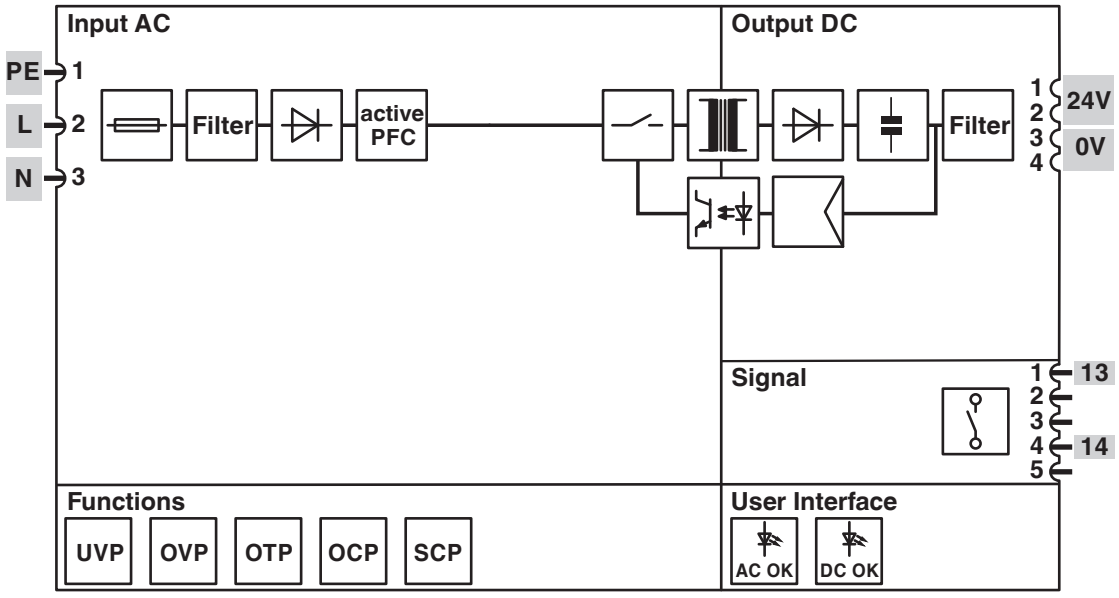


Block diagram

## Approvals

To download certificates, visit the product detail page: https://www.phoenixcontact.com/gb/products/1065976

**IECEE CB Scheme**
Approval ID: DK-135371-A1-UL

**cULus Listed**
Approval ID: FILE E 123528

**EAC**
Approval ID: RU S-DE.BL08.W.00764

**EAC**
Approval ID: KZ7500651 0101 12535

**IECEE CB Scheme**
Approval ID: DK-135371-A1-UL

**cULus Listed**
Approval ID: FILE E 123528

**EAC**
Approval ID: RU S-DE.BL08.W.00764

**EAC**
Approval ID: KZ7500651 0101 12535

## Classifications

### ECLASS

| | |
|---|---|
| ECLASS-13.0 | 27040701 |
| ECLASS-15.0 | 27040701 |

### ETIM

| | |
|---|---|
| ETIM 10.0 | EC002540 |

### UNSPSC

| | |
|---|---|
| UNSPSC 21.0 | 39121000 |

## Environmental product compliance

EU RoHS

| | |
|---|---|
| Fulfills EU RoHS substance requirements | Yes |
| Exemption | 6(c), 7(a), 7(c)-I |

China RoHS

| | |
|---|---|
| Environment friendly use period (EFUP) | EFUP-25 |
| | An article-related China RoHS declaration table can be found in the download area for the respective article under "Manufacturer declaration". For all articles with EFUP-E, no China RoHS declaration table issued and required. |

EU REACH SVHC

| | |
|---|---|
| REACH candidate substance (CAS No.) | Diboron trioxide(CAS: 1303-86-2) |
| | Lead monoxide (lead oxide)(CAS: 1317-36-8) |
| | Lead(CAS: 7439-92-1) |
| | 6,6'-di-tert-butyl-2,2'-methylenedi-p-cresol(CAS: 119-47-1) |
| SCIP | 8eff7996-8c21-4152-919e-5b5ba1f54916 |

EF3.1 Climate Change

| | |
|---|---|
| CO2e kg | 28.41 kg CO2e |


Phoenix Contact 2026 © - all rights reserved
https://www.phoenixcontact.com



PHOENIX CONTACT Ltd
Halesfield 13, Telford
Shropshire, TF7 4PG
01952 681700
info@phoenixcontact.co.uk