MACX MCR-RTD-I-SP-C - Temperature measuring transducer

1052464

https://www.phoenixcontact.com/gb/products/1052464

Please be informed that the data shown in this PDF document is generated from our online catalog. Please find the complete data in the user documentation. Our general terms of use for downloads are valid.

CRA-READY



Temperature transducer, converts signals from resistance temperature detectors and resistors into analog 0/4 - 20 mA signals. Freely programmable, Push-in connection, SIL, 3-way electrical isolation, order configuration.

Your advantages

- Power supply possible via DIN rail connector
- Programming possible during operation, when measuring circuit is connected, and also when power is switched off using the IFS-USB-PROG-ADAPTER programming adapter
- Installation in zone 2, protection type "ec" (EN 60079-7) permitted
- 3-way electrical isolation
- Status indicator for supply voltage, cable, sensor, and module errors
- Configuration via software (FDT/DTM): sensor type, connection technology, measuring range, measuring unit, filter, alarm signal, and output range
- Output: 0 mA ... 20 mA or 4 mA ... 20 mA

Commercial data

Item number	1052464
Packing unit	1 pc
Minimum order quantity	1 pc
Note	Made to order (non-returnable)
Sales key	DK1115
Product key	DK1115
Weight per piece (including packing)	103.5 g
Customs tariff number	85437090
Country of origin	DE

Technical data

Notes

Note on application

Note on application	As things stand now, we are preparing the product so that, as of December 11, 2027, it will comply with the requirements of the EU Cyber Resilience Act (CRA) based on the information currently available regarding the CRA.

Utilization restriction

EMC note	EMC: class A product, see manufacturer's declaration in the download area

Product properties

Product type	Temperature transmitter
Product family	MACX Analog
Application	Temperature
No. of channels	1
Configuration	Software

System properties

Functionality

Configuration	Software

Electrical properties

Electrical isolation	3-way isolation
Electrical isolation between input and output	yes
Step response (0–99%)	≤ 1.7 s (with filter factor = 1)
Temperature coefficient, typical	0.01 %/K
Transmission error, typical	0.1 % (e.g. for Pt 100, 300 K span, 4 ... 20 mA)

Electrical isolation

Test voltage	2.5 kV AC (50 Hz, 60 s)
Overvoltage category	II
Pollution degree	2

Electrical isolation Input/output/power supply IEC/EN 61010-1

Standards/regulations	IEC/EN 61010-1
Rated insulation voltage	300 V_{rms}
Insulation	Safe isolation

Electrical isolation Input/output IEC/EN 60079-11

Standards/regulations	IEC/EN 60079-11
Rated insulation voltage	375 V_{PP}

Electrical isolation Input/power supply IEC/EN 60079-11

Standards/regulations	IEC/EN 60079-11
Rated insulation voltage	375 V_{PP}

Supply

Nominal supply voltage	24 V DC -20 % ... +25 %
Supply voltage range	19.2 V DC ... 30 V DC
Power dissipation	≤ 0.76 W
Power consumption	≤ 1 W

Input data

Measurement

Sensor types (RTD) that can be used	Pt, Ni, Cu sensors: 2, 3, 4-wire
Temperature measuring range	-200 °C ... 850 °C (Range depending on the sensor type)
Linear resistance measuring range	0 Ω ... 50 kΩ
Potentiometer resistance range	0 Ω ... 50 kΩ
Max. permissible overall conductor resistance	50 Ω (Per cable)
Sensor input current	10 µA ... 210 µA (Up to 2x 210 µA with 3-conductor technology)
Temperature measuring range	≥ 50 K

Output data

Signal: Current

Number of outputs	1
Configurable/programmable	Yes
Current output signal	0 mA ... 20 mA
	4 mA ... 20 mA (SIL)
Max. current output signal	≥ 21 mA
Load/output load current output	≤ 600 Ω
Output ripple (current)	< 15 μA_{PP}
	< 10 μA_{rms}
Behavior in the event of a sensor error	Freely definable

Connection data

Connection method	Push-in connection
Stripping length	10 mm
Conductor cross-section rigid	0.2 mm² ... 2.5 mm²
Conductor cross-section flexible	0.2 mm² ... 2.5 mm²
Conductor cross-section flexible (2 conductors with same cross section)	0.25 mm² ... 0.34 mm² (TWIN ferrule without plastic sleeve)
	0.5 mm² ... 1.5 mm² (TWIN ferrule with plastic sleeve)
Conductor cross-section AWG	24 ... 14
	24 ... 22 (TWIN ferrule without plastic sleeve)
	20 ... 16 (TWIN ferrule with plastic sleeve)

Ex data

Ex installation (EPL)	Gc

	Div. 2

Signaling

Status display	Green LED (supply voltage)
	Red LED, flashing 2.8 Hz (cable error, sensor error on input or output, ERR)
	Red LED, flashing 1.2 Hz (simulation mode, ERR)
	Red LED, permanently on (module error, ERR)

Dimensions

Dimensional drawing	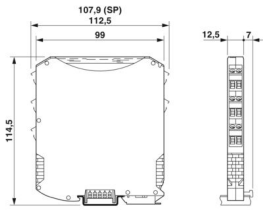
Width	12.5 mm
Height	107.9 mm
Depth	113.7 mm
Depth NS 35/7,5	114.5 mm (Snapped onto DIN rail NS 35/7,5 in accordance with EN 60715)

Material specifications

Color	gray (RAL 7042)
Flammability rating according to UL 94 (Housing)	V0 (Housing)
Housing material	PA 6.6-FR

Environmental and real-life conditions

Ambient conditions

Degree of protection	IP20
Ambient temperature (operation)	-40 °C ... 70 °C (Any mounting position)
Ambient temperature (storage/transport)	-40 °C ... 80 °C
Permissible humidity (operation)	5 % ... 95 % (non-condensing)

Altitude range (≤ 2000 m)

Altitude	≤ 2000 m (The technical data refers to altitudes ≤2000 m above mean sea level. For altitudes >2000 m above mean sea level, refer to the data sheet.)
Ambient temperature (operation)	-40 °C ... 70 °C
Test voltage	2.5 kV
Rated insulation voltage	300 V_{rms}

Altitude range (≤ 3000 m)

Height range	> 2000 m ... 3000 m
Ambient temperature (operation)	-40 °C ... 63 °C

Test voltage	2.25 kV
Rated insulation voltage	150 V_{rms}

Altitude range (≤ 4000 m)

Height range	> 3000 m ... 4000 m
Ambient temperature (operation)	-40 °C ... 56 °C
Test voltage	2 kV
Rated insulation voltage	150 V_{rms}

Altitude range (≤ 5000 m)

Height range	> 4000 m ... 5000 m
Ambient temperature (operation)	-40 °C ... 49 °C
Test voltage	1.75 kV
Rated insulation voltage	150 V_{rms}

Approvals

CE

Certificate	CE-compliant
Note	and EN 61326

ATEX

Identification	Ⓔx II 3 G Ex ec ic IIC T4 Gc
Certificate	IBExU19ATEX1006 X

IECEx

Identification	Ex ec ic IIC T4 Gc
Certificate	IECEx IBE 19.0001 X

UL, USA/Canada

Identification	UL 61010 Listed
	Class I, Div. 2, Groups A, B, C, D T4
	Class I, Zone 2, Group IIC T4

Shipbuilding approval

Certificate	DNV GL TAA00000AG

Safety Integrity Level (SIL, IEC 61508)

Identification	2
Certificate	SEBS-A.150520/17, V2.0

Systematic Capability

Identification	2

INMETRO

Identification	Ex ec ic IIC T4 Gc
Certificate	DNV 21.0064 X

EAC Ex

Identification	Ex ec ic IIC T4 Gc
Certificate	BY/112 02.01 TP012 103.01 00082

Shipbuilding data

Temperature	B
Humidity	B
Vibration	A
EMC	B
Enclosure	Required protection according to the Rules shall be provided upon installation on board

EMC data

Electromagnetic compatibility	Conformance with EMC directive
Noise immunity	EN 61000-6-2
Note	When being exposed to interference, there may be minimal deviations.

Noise emission

Standards/regulations	EN 61000-6-4

Electromagnetic HF field

Designation	Electromagnetic RF field
Standards/regulations	EN 61000-4-3
Typical deviation from the upper range value	1 %

Fast transients (burst)

Designation	Fast transients (burst)
Standards/regulations	EN 61000-4-4
Typical deviation from the upper range value	1 %

Conducted interference

Designation	Conducted interferences
Standards/regulations	EN 61000-4-6
Typical deviation from the upper range value	1 %

Standards and regulations

Electrical isolation	3-way isolation

Mounting

Mounting type	DIN rail mounting

Drawings

Dimensional drawing

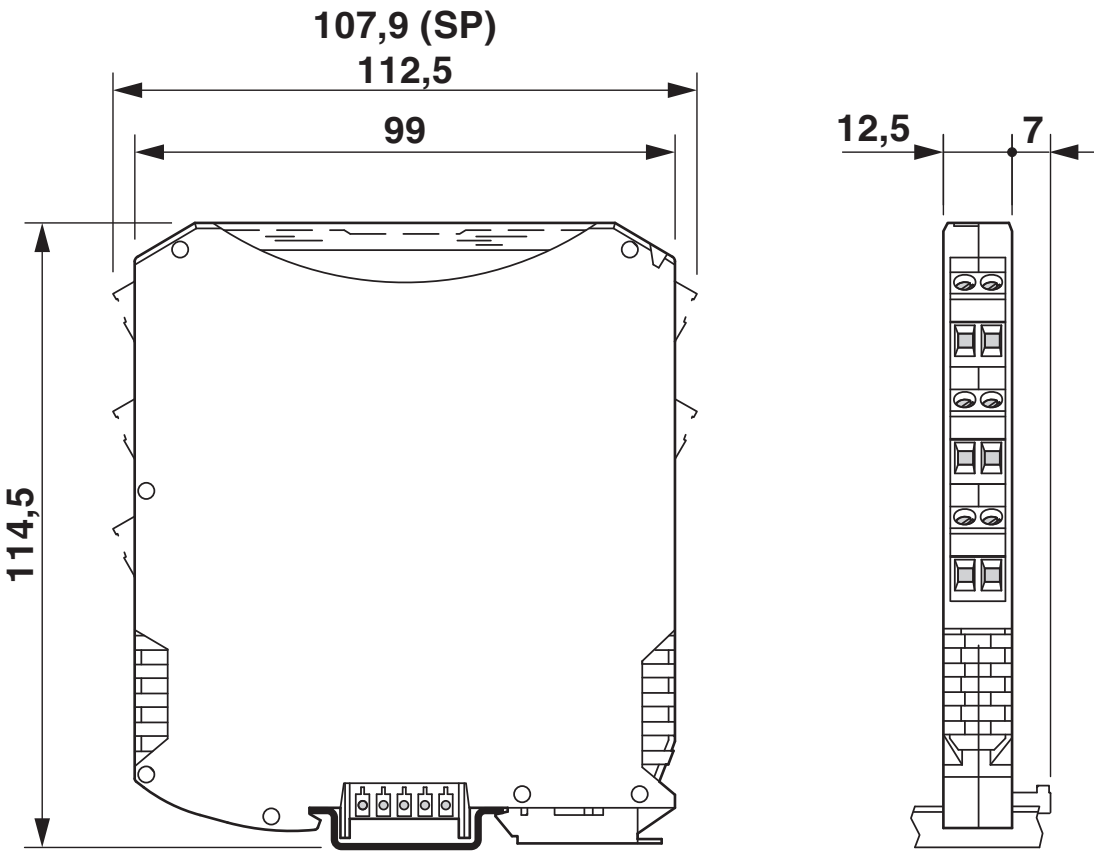

Block diagram

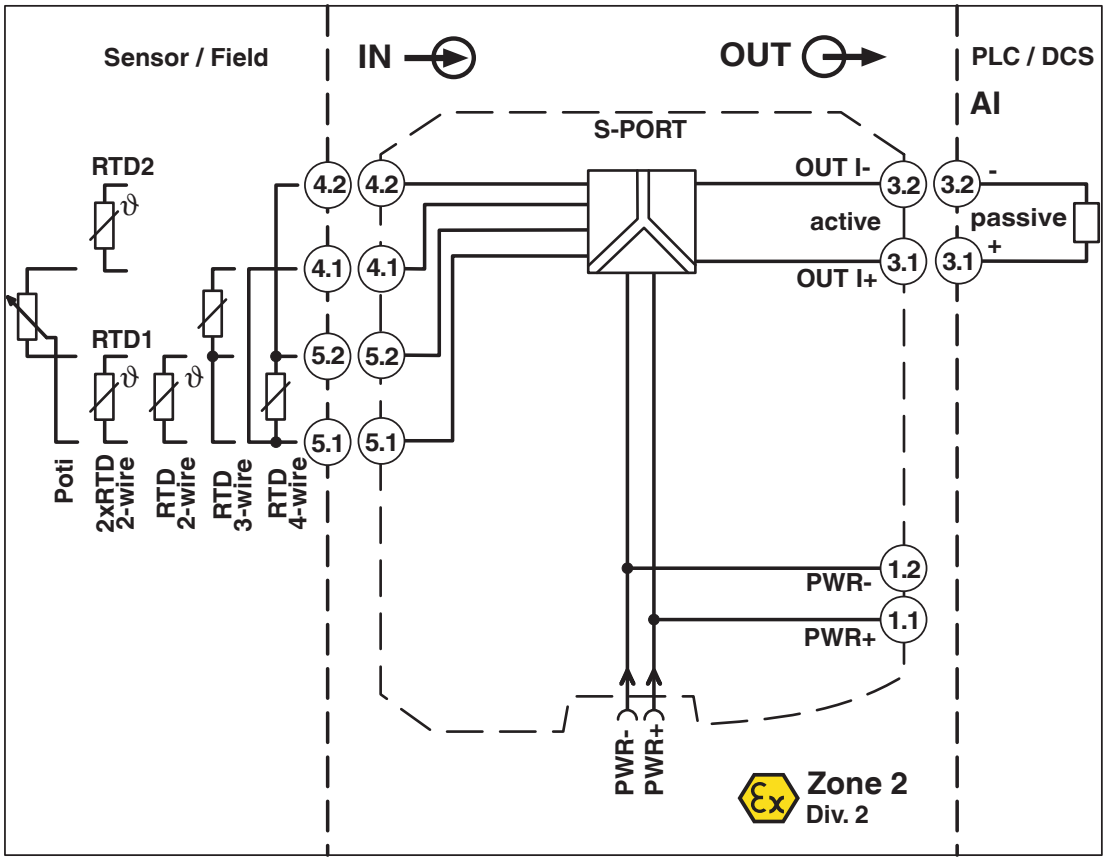

Approvals

To download certificates, visit the product detail page: https://www.phoenixcontact.com/gb/products/1052464

UL Listed
Approval ID: E330267

cUL Listed
Approval ID: FILE E 330267

Functional Safety
Approval ID: SEBS-A.20170608

DNV
Approval ID: TAA00000AG

ECAS
Approval ID: 163742 E25 08 169509

cULus Listed
Approval ID: E330267

DNV
Approval ID: TAA000020C

IECEx
Approval ID: IECEx IBE 19.0001X

cUL Listed
Approval ID: E199827

UL Listed
Approval ID: E199827

INMETRO
Approval ID: DNV 21.0064 X

ATEX
Approval ID: IBEXU 25 ATEX B008X

Classifications

ECLASS

ECLASS-13.0	27210129
ECLASS-15.0	27210129

ETIM

ETIM 10.0	EC002919

UNSPSC

UNSPSC 21.0	41112100

Environmental product compliance

EU RoHS

Fulfills EU RoHS substance requirements	Yes
Exemption	7(a), 7(a)-I, 7(c)-I

China RoHS

Environment friendly use period (EFUP)	EFUP-50
	An article-related China RoHS declaration table can be found in the download area for the respective article under "Manufacturer declaration". For all articles with EFUP-E, no China RoHS declaration table issued and required.

EU REACH SVHC

REACH candidate substance (CAS No.)	Lead(CAS: 7439-92-1)

Phoenix Contact 2026 © - all rights reserved
https://www.phoenixcontact.com

PHOENIX CONTACT Ltd
Halesfield 13, Telford
Shropshire, TF7 4PG
01952 681700
info@phoenixcontact.co.uk