AXL F EX IS DI16 NAM XC 1F - Digital module

1052423

https://www.phoenixcontact.com/gb/products/1052423

Please be informed that the data shown in this PDF document is generated from our online catalog. Please find the complete data in the user documentation. Our general terms of use for downloads are valid.

CRA-READY



Axioline F, Digital input module, Digital inputs: 16 (NAMUR), 8 V DC, connection technology: 2-conductor, Extreme conditions version, intrinsically safe, transmission speed in the local bus: 100 Mbps, degree of protection: IP20, including bus base module and Axioline F connectors; The product is being prepared for compliance with the Cyber Resilience Act (CRA).

Product description

The module is an Axioline F I/O module for use in the Axioline F modular I/O system. The module is a modular I/O device that can be affixed to the Axioline F local bus, to communicate I/O data up to the Axioline F controller or bus coupler, which forms the head of the station. As an intrinsic safety I/O module, this device allows direct connection from intrinsically safe field I/Os to the terminals of the module. The digital input module with NAMUR capabilities collects digital input signals and supports NAMUR proximity and close contact switches and makes this information available to the controller / bus coupler through the Axioline F local bus. The I/O module will set a digital input logic "low" for non-conducting sensors and a digital input logic "high" for conducting sensors.

Your advantages

- 16 NAMUR digital input signals for NAMUR proximity sensors according to EN 60947-5-6
- Open circuit contacts
- Switch contacts with resistance circuit in accordance with IEC/EN 60947-5-6
- Connection of sensors in 2-conductor technology
- Intrinsically safe digital inputs with connection to Zone 1, Zone 0 or Division 1
- Can be used under extreme ambient conditions
- Extended temperature range of -40 °C ... +70 °C (see “Tested successfully: use under extreme ambient conditions” in the data sheet)

ELEKTROGERÄTE RÜCKNAHME

Commercial data

Item number	1052423
Packing unit	1 pc
Minimum order quantity	1 pc
Sales key	DRI2E4
Product key	DRI2E4
GTIN	4055626674940
Weight per piece (including packing)	420 g
Weight per piece (excluding packing)	292.5 g
Customs tariff number	85389099
Country of origin	US

Technical data

Dimensions

Dimensional drawing	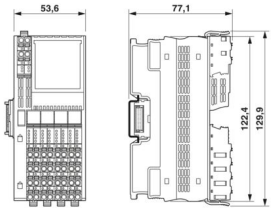
Width	53.6 mm
Height	129.9 mm
Depth	77.1 mm
Note on dimensions	The depth applies when a TH 35-7.5 DIN rail is used (in accordance with EN 60715).

Notes

Note on application	Only for industrial use
Note on application	As things stand now, we are preparing the product so that, as of December 11, 2027, it will comply with the requirements of the EU Cyber Resilience Act (CRA) based on the information currently available regarding the CRA.

Utilization restriction

EMC note	EMC: class A product, see manufacturer's declaration in the download area

Utilization restriction

CCCex note	Use in potentially explosive areas is not permitted in China.

Mounting

Mounting type	DIN rail mounting
Mounting position	any (no temperature derating)

Material specifications

Color (Housing)	gray (RAL 7042)

Interfaces

Axioline F local bus

Number of interfaces	2
Connection method	Bus base module
Transmission speed	100 Mbps

System properties

Programming data

Input address area	2 Byte (Firmware 1.00)
	4 Byte (Firmware 1.04 or later)
Output address area	0 Byte

Fieldbus data telegram (PROFIBUS)

Required parameter data	6 Byte
Required configuration data	6 Byte

Input data

Digital:

Input name	Digital inputs
Description of the input	NAMUR enabled digital input signals
Number of inputs	16 (NAMUR)
Connection method	Push-in connection
Connection technology	2-conductor
Nominal input voltage U_{IN}	8.2 V DC
Process data update	1.2 ms

Product properties

Product type	I/O component
Product family	Axioline F
Type	block modular
Mounting position	any (no temperature derating)
Scope of supply	including bus base module and Axioline F connectors
Special properties	The product is being prepared for compliance with the Cyber Resilience Act (CRA)
	Extreme conditions version
	intrinsically safe

Insulation characteristics

Overvoltage category	II (IEC 60664-1, EN 60664-1)
Pollution degree	2 (IEC 60664-1, EN 60664-1)

Electrical properties

Maximum power dissipation for nominal condition	2.8 W

Potentials: Axioline F local bus supply (U_{Bus})

Supply voltage	5 V DC (via bus base module)
Current draw	max. 60 mA
	typ. 40 mA

Potentials: Supply for digital input modules (U_I)

Supply voltage	24 V DC
Supply voltage range	19.2 V DC ... 30 V DC (including all tolerances, including ripple)
Current draw	max. 130 mA
	Surge protection; electronic (35 V, 0.5 s)

Protective circuit	Reverse polarity protection; Polarity protection diode
	Transient protection; Suppressor diode

Electrical isolation/isolation of the voltage ranges

Test voltage: 5 V supply of the local bus (U_{Bus}) / 24 V supply (I/Os)	500 V AC, 60 Hz, 1 min
Test voltage: 5 V supply of the local bus (U_{Bus}) / functional ground	500 V AC, 60 Hz, 1 min
Test voltage: 5 V supply of the local bus (U_{Bus}) / digital inputs	1500 V AC, 60 Hz, 1 min
Test voltage: 24 V supply (I/O) / functional ground	500 V AC, 60 Hz, 1 min
Test voltage: 24 V supply (I/O) / digital inputs	1500 V AC, 60 Hz, 1 min
Test voltage: Digital inputs / functional ground	500 V AC, 60 Hz, 1 min

Connection data

Connection technology

Connection name	Axioline F connector
Note on the connection method	Please observe the information provided on conductor cross-sections in the “Axioline F: system and installation” user manual.

Axioline F connector

Connection method	Push-in connection
Note on the connection method	Please observe the information provided on conductor cross-sections in the “Axioline F: system and installation” user manual.
Conductor cross-section, rigid	0.2 mm² ... 1.5 mm²
Conductor cross-section, flexible	0.2 mm² ... 1.5 mm²
Conductor cross-section AWG	24 ... 16
Stripping length	8 mm

Environmental and real-life conditions

Ambient conditions

Ambient temperature (operation)	-25 °C ... 60 °C (Standard)
	-40 °C ... 70 °C (Extended, see section “Tested successfully: use under extreme ambient conditions” in the data sheet.)
Degree of protection	IP20
Air pressure (operation)	70 kPa ... 106 kPa (up to 3000 m above sea level)
Air pressure (storage/transport)	70 kPa ... 106 kPa (up to 3000 m above sea level)
Ambient temperature (storage/transport)	-40 °C ... 85 °C
Permissible humidity (operation)	5 % ... 95 % (non-condensing)
Permissible humidity (storage/transport)	5 % ... 95 % (non-condensing)

Mechanical test

Vibration resistance in accordance with EN 60068-2-6/IEC 60068-2-6	5g
Shock in accordance with EN 60068-2-27/IEC 60068-2-27	30g
Continuous shock in accordance with EN 60068-2-27/IEC 60068-2-27	10g

Standards and regulations

Protection class	III (IEC 61140, EN 61140, VDE 0140-1)

Approvals

ATEX

Identification	II 3(1) G Ex ec [ia Ga] IIC T4 Gc II (1) D [Ex ia Da] IIIC
Certificate	DEMKO 20 ATEX 2370X

IECEx

Identification	Ex ec [ia Ga] IIC T4 Gc [Ex ia Da] IIIC
Certificate	IECEx UL 20.0044X

UKCA Ex (UKEX)

Identification	II 3(1) G Ex ec [ia Ga] IIC T4 Gc II (1) D [Ex ia Da] IIIC
Certificate	UL22UKEX2508X

UL, USA/Canada

Identification	cULus
Certificate	E238705

UL Ex, USA / Canada

Identification	Class I, Division 2, Groups A, B, C, D, T4
	Intrinsically safe connections to: Class I, Groups A, B, C, D; Class II, Groups E, F, G; Class III; [Ex ia] Haz loc
	Class I, Zone 2, AEx ec [ia Ga] IIC T4 Gc
	[AEx ia Da] IIIC
	Ex ec [ia Ga] IIC T4 Gc
	[Ex ia Da] IIIC
Certificate	E196811

CCC / China-Ex

Identification	Ex ec [ia Ga] IIC T4 Gc
	[Ex ia Da] IIIC

Ex data

UL, USA / Canada	Ind. Cont. Eq. (E238705) also Listed Ind. Cont. Eq. for haz. loc. E196811 Install in: Class I, Div. 2, Groups A, B, C, D T4 Intrinsically safe outputs for: Class I, Groups A, B, C, D; Class II, Groups E, F, G; Class III; [Ex ia] Haz loc Class I, Zone 2, AEx ec [ia Ga] IIC T4 Gc [AEx ia Da] IIIC Ex ec [ia Ga] IIC T4 Gc [Ex ia Da] IIIC

Ex data

Safety data

Max. output voltage U_o	10.6 V
Max. output current I_o	11 mA
Max. output power P_o	30 mW
Safety-related maximum voltage U_m	250 V
A, B / IIC: Max. external inductivity L_o / Max. external capacitance C_o	100 mH / 2.3 µF
C/IIB, IIIC: Max. external inductivity L_o / Max. external capacitance C_o	100 mH / 16 µF
D/IIA, E, F, G, Class III: Max. external inductivity L_o / Max. external capacitance C_o	100 mH / 71.8 µF

Drawings

Dimensional drawing

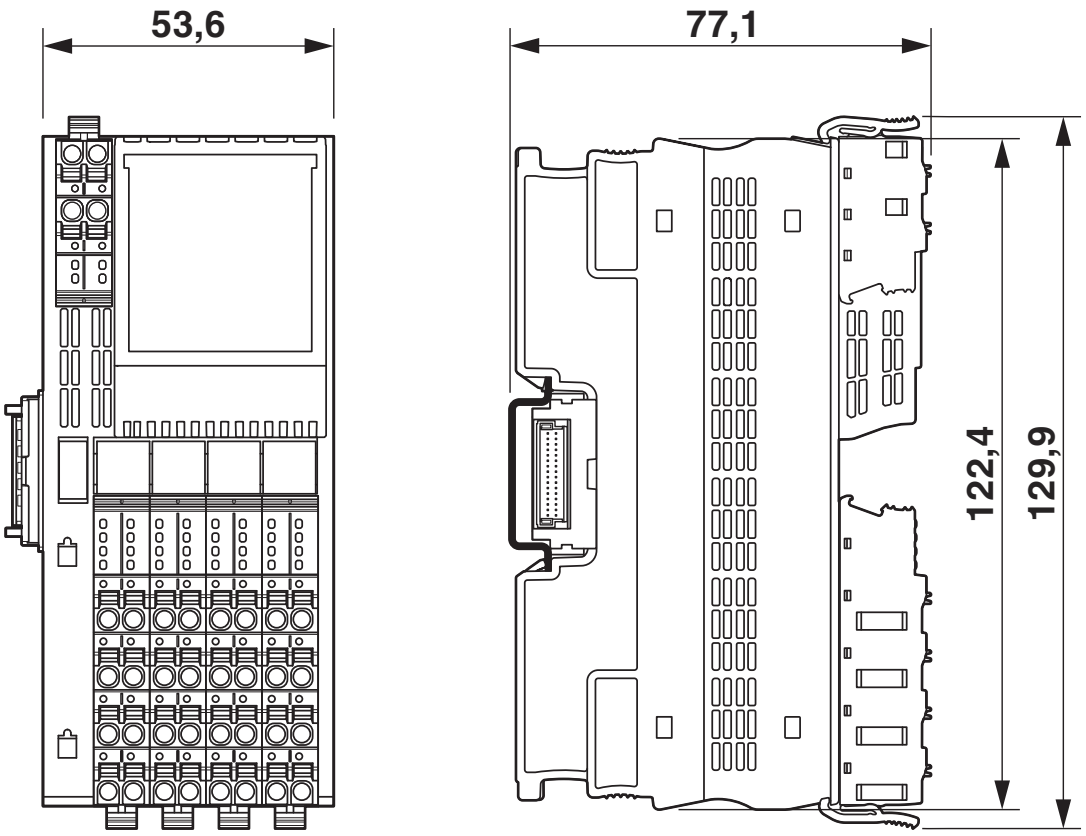

Dimensional drawing

Connection diagram

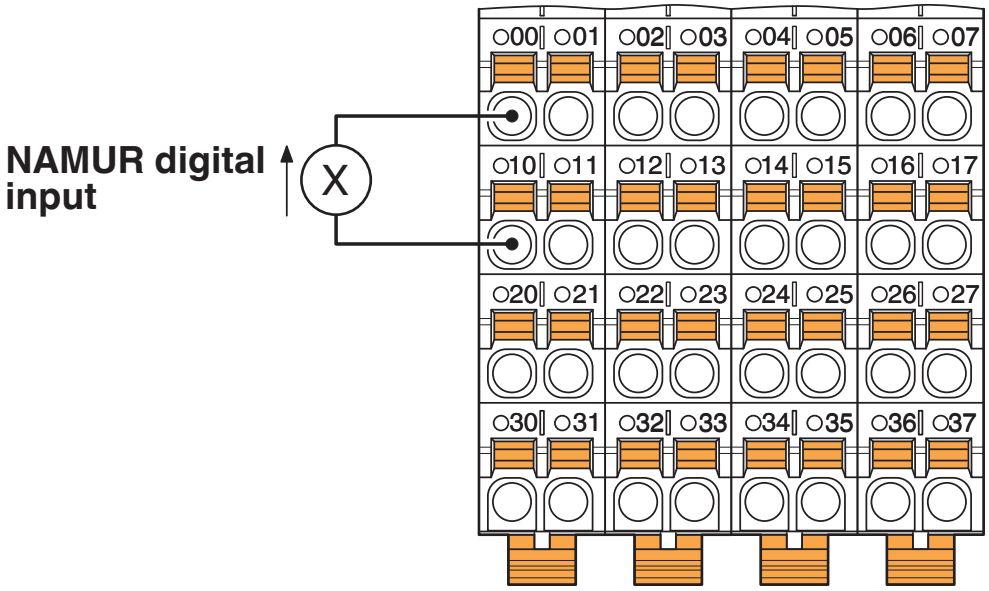

Connection for NAMUR digital input

Schematic diagram

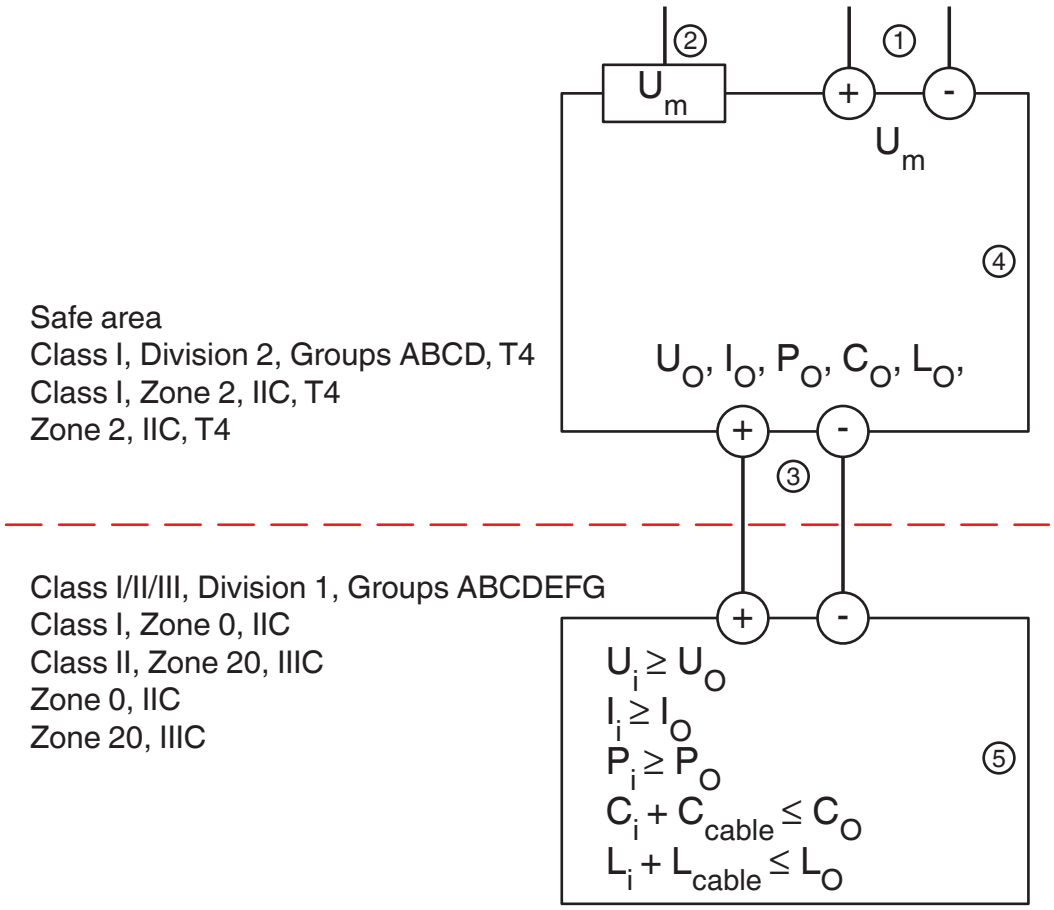

Approvals

To download certificates, visit the product detail page: https://www.phoenixcontact.com/gb/products/1052423

cULus Listed
Approval ID: E238705

IECEx
Approval ID: IECEx UL 20.0044X

cUL Listed
Approval ID: FILE E196811

UL Listed
Approval ID: FIILE E196811

ATEX
Approval ID: DEMKO 20 ATEX 2370X

CCC
Approval ID: 2025122316122298

UKCA-EX
Approval ID: UL22UKEX2508X

Classifications

ECLASS

ECLASS-13.0	27242604
ECLASS-15.0	27242604

ETIM

ETIM 10.0	EC001599

UNSPSC

UNSPSC 21.0	32151600

Environmental product compliance

EU RoHS

Fulfills EU RoHS substance requirements	Yes
Exemption	7(a), 7(c)-I

China RoHS

Environment friendly use period (EFUP)	EFUP-25
	An article-related China RoHS declaration table can be found in the download area for the respective article under "Manufacturer declaration". For all articles with EFUP-E, no China RoHS declaration table issued and required.

EU REACH SVHC

REACH candidate substance (CAS No.)	Lead(CAS: 7439-92-1)
SCIP	a18a7f42-803b-4991-a5d6-059413f35187

Phoenix Contact 2026 © - all rights reserved
https://www.phoenixcontact.com

PHOENIX CONTACT Ltd
Halesfield 13, Telford
Shropshire, TF7 4PG
01952 681700
info@phoenixcontact.co.uk