QUINT4-S-ORING/12-24DC/1X40/VP - Redundancy module, with protective coating

1043418

https://www.phoenixcontact.com/gb/products/1043418

Please be informed that the data shown in this PDF document is generated from our online catalog. Please find the complete data in the user documentation. Our general terms of use for downloads are valid.



Active QUINT single redundancy module for DIN rail mounting, protective coating, input: 12 V DC … 24 V DC, output: 12 V DC … 24 V DC / 1 x 40 A, integrated surge protection <30 V DC, incl. mounted UTA 107/30 universal DIN rail adapter

Product description

Active redundancy module for superior system availability and maximum operational reliability. QUINT S-ORING enables the separate structuring of a redundant system. In combination with the new QUINT POWER power supply, the redundant system is monitored continuously.

Your advantages

- Consistent redundancy up to the load
- Input voltage and decoupling section monitored on a permanent basis
- Save energy by decoupling with MOSFET
- Protection against surge voltages in excess of 30 V DC at the output
- Protective coating with ATEX and IECEx approval for extreme environmental conditions

ELEKTROGERÄTE RÜCKNAHME

Commercial data

Item number	1043418
Packing unit	1 pc
Minimum order quantity	1 pc
Sales key	CMRI43
Product key	CMRI43
GTIN	4055626607474
Weight per piece (including packing)	560.1 g

Weight per piece (excluding packing)	560 g
Customs tariff number	85371091
Country of origin	CN

Technical data

Input data

DC operation

Nominal input voltage range	12 V DC ... 24 V DC
Input voltage range	8 V DC ... 27.5 V DC (SELV)
Typical national grid voltage	12 V DC
	24 V DC
Voltage type of supply voltage	DC
Current consumption	40 A
Static Boost ($I_{Stat.Boost}$)	45 A
Dynamic Boost ($I_{Dyn.Boost}$)	60 A (5 s)
Selective Fuse Breaking (I_{SFB})	215 A (15 ms)
Reverse polarity protection	yes, < 60 V
Nominal input current (I_N)	40 A (-40 °C ... 60 °C)
Input current I_{Static}	45 A (40 °C)
Input current $I_{Dynamic}$	60 A (5 s)
Input current I_{SFB}	215 A (15 ms)
Transient surge protection	Varistor
Voltage drop, input/output	0.1 V DC

Output data

Efficiency	typ. 99 % (12 V DC)
	typ. 99.2 % (24 V DC)
Nominal output voltage	U_{In} - 0.1 V
Nominal output current (I_N)	40 A
Static Boost ($I_{Stat.Boost}$)	45 A
Dynamic Boost ($I_{Dyn.Boost}$)	60 A (5 s)
Selective Fuse Breaking (I_{SFB})	215 A (15 ms)
Derating	60 °C ... 70 °C (2.5 %/K)
Protection against overvoltage at the output (OVP)	< 30 V DC
Power loss nominal load max.	6.5 W (I_{OUT} = 40 A)
	6 W (I_{OUT} = 40 A)
Connection in series	no

Signal: OK, 13/14

Output description	Group contact
Maximum switching voltage	max. 30 V AC/DC
Maximum inrush current	≤ 100 mA (short-circuit-proof)

Signal relay 13/14

Default	open

Signal relay 13/14

Default	closed

Signal relay 13/14

Default	open

Signal relay 13/14

Default	open

Connection data

Input

Connection method	Screw connection
Conductor cross-section, rigid min.	0.5 mm²
Conductor cross-section, rigid max.	16 mm²
Conductor cross-section flexible min.	0.5 mm²
Conductor cross-section flexible max.	16 mm²
Single conductor/flexible terminal point with ferrule with plastic sleeve, min.	0.5 mm²
Single conductor/flexible terminal point with ferrule with plastic sleeve, max.	16 mm²
Single conductor/flexible terminal point with ferrule without plastic sleeve, min.	0.5 mm²
Single conductor/flexible terminal point with ferrule without plastic sleeve, max.	16 mm²
Conductor cross-section AWG min.	20
Conductor cross-section AWG max.	6
Stripping length	10 mm
Screw thread	M4
Tightening torque, min	1.2 Nm
Tightening torque max	1.5 Nm

Output

Connection method	Screw connection
Conductor cross-section, rigid min.	0.5 mm²
Conductor cross-section, rigid max.	16 mm²
Conductor cross-section flexible min.	0.5 mm²
Conductor cross-section flexible max.	16 mm²
Single conductor/flexible terminal point with ferrule with plastic sleeve, min.	0.5 mm²
Single conductor/flexible terminal point with ferrule with plastic sleeve, max.	16 mm²
Single conductor/flexible terminal point with ferrule without plastic sleeve, min.	0.5 mm²
Single conductor/flexible terminal point with ferrule without plastic sleeve, max.	16 mm²

Conductor cross-section AWG min.	20
Conductor cross-section AWG max.	6
Stripping length	10 mm
Screw thread	M4
Tightening torque, min	1.2 Nm
Tightening torque max	1.5 Nm

Signal

Connection method	Push-in connection
Conductor cross-section, rigid min.	0.2 mm²
Conductor cross-section, rigid max.	1.5 mm²
Conductor cross-section flexible min.	0.2 mm²
Conductor cross-section flexible max.	1.5 mm²
Single conductor/flexible terminal point with ferrule with plastic sleeve, min.	0.2 mm²
Single conductor/flexible terminal point with ferrule with plastic sleeve, max.	0.75 mm²
Single conductor/flexible terminal point with ferrule without plastic sleeve, min.	0.2 mm²
Single conductor/flexible terminal point with ferrule without plastic sleeve, max.	1.5 mm²
Conductor cross-section AWG min.	24
Conductor cross-section AWG max.	16
Stripping length	8 mm

Signaling

Types of signaling	Relay contact, floating, current limited

Signal output: OK, 13/14

U_{In} < 8 V DC	LED off, input voltage not present or short circuit at redundancy module output
U_{In} > 8 V DC	LED lights up green, input voltage present
U_{In} > 30 V DC	LED flashing red, OVP active - input voltage exceeds the permissible voltage value
Redundancy modul faulty	LED lights up red, redundancy module needs to be factory tested

Electrical properties

Insulation voltage input, output / housing	500 V DC

Product properties

Product type	Redundancy module
Product family	QUINT S-ORING
MTBF (IEC 61709, SN 29500)	> 13486000 h (25 °C)
	> 7314000 h (40 °C)
	> 3379000 h (60 °C)
LED	yes

Insulation characteristics

Protection class	III
Degree of pollution	2

Life expectancy (electrolytic capacitors)

Current	40 A
Temperature	40 °C
Time	160000 h
Additional text	12 V DC

Life expectancy (electrolytic capacitors)

Current	40 A
Temperature	40 °C
Time	149000 h
Additional text	24 V DC

Dimensions

Dimensional drawing	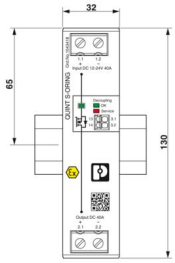
Width	32 mm
Height	130 mm
Depth	125 mm

Installation dimensions

Installation distance right/left	0 mm / 0 mm
Installation distance top/bottom	50 mm / 50 mm

Alternative assembly

Width	122 mm
Height	130 mm
Depth	35 mm

Mounting

Mounting type	DIN rail mounting
Assembly note	alignable: P_N ≥50%, 5 mm horizontally, 15 mm next to active components, 50 mm vertically alignable: P_N <50%, 0 mm horizontally, 40 mm vertically top, 20 mm vertically bottom
Mounting position	horizontal DIN rail NS 35, EN 60715

Material specifications

Flammability rating according to UL 94 (housing / terminal blocks)	V0
Housing material	Metal
Housing material	Aluminum / stainless steel
Type of housing	Aluminum (AlMg3)
Hood version	Galvanized sheet steel, free from chrome (VI)

Environmental and real-life conditions

Ambient conditions

Degree of protection	IP20
Ambient temperature (operation)	-40 °C ... 70 °C (> 60 °C Derating: 2,5 %/K)
Ambient temperature (storage/transport)	-40 °C ... 85 °C
Maximum altitude	≤ 5000 m (> 2000 m, observe derating)
Climatic class	3K22 (in accordance with EN 60721-3-3)
Max. permissible relative humidity (operation)	≤ 100 % (at 25 °C, non-condensing)
Shock	18 ms, 30g, in each space direction (according to IEC 60068-2-27)
Vibration (operation)	< 15 Hz, amplitude ±2.5 mm (according to IEC 60068-2-6)
	15 Hz ... 150 Hz, 2.3g, 90 min.
Temp code	T4 (-25 ... +70 °C; > 60 °C, Derating: 2,5 %/K)

Standards and regulations

Standard - Electrical safety	IEC 62368-1
Standard – Safety extra-low voltage	IEC 62368-1

Approvals

UL approvals	UL/C-UL listed UL 508
	UL/C-UL Recognized UL 60950-1
	UL 121201 & CSA C22.2 No. 213-17 Class I, Division 2, Groups A, B, C, D T4 (Hazardous Location)

Conformity/Approvals

ATEX	Ⓔx II 3 G Ex ec nC IIC T4 Gc
	SIQ 21 ATEX 183 X
IECEx	Ex ec nC IIC T4 Gc
	IECEx SIQ 21.0001X

EMC data

Electromagnetic compatibility	Conformance with EMC Directive 2014/30/EU
Low Voltage Directive	Conformance with Low Voltage Directive 2014/35/EC
EMC requirements for noise emission	EN 61000-6-3
	EN 61000-6-4

EMC requirements for noise immunity	EN 61000-6-1
	EN 61000-6-2

Conducted noise emission

Standards/regulations	EN 55016
	EN 61000-6-3 (Class B)

Noise emission

Standards/regulations	Additional basic standard EN 61000-6-5 (immunity in power station)

Noise emission

Standards/regulations	EN 55016
	EN 61000-6-3 (Class B)

DNV GL conducted noise emissions

DNV	Class A
Additional text	Area power distribution

DNV GL noise radiation

DNV	Class B
Additional text	Bridge and deck area

Electrostatic discharge

Standards/regulations	EN 61000-4-2

Electrostatic discharge

Contact discharge	8 kV (Test Level 4)
Discharge in air	15 kV (Test Level 4)
Comments	Criterion A

Electromagnetic HF field

Standards/regulations	EN 61000-4-3

Electromagnetic HF field

Frequency range	80 MHz ... 1 GHz
Test field strength	20 V/m (Test Level 3)
Frequency range	1 GHz ... 6 GHz
Test field strength	10 V/m (Test Level 3)
Comments	Criterion A

Fast transients (burst)

Standards/regulations	EN 61000-4-4

Fast transients (burst)

Input	2 kV (Test Level 3 - asymmetrical)
Output	2 kV (Test Level 3 - asymmetrical)
Signal	2 kV (Test Level 4 - asymmetrical)

Comments	Criterion B

Surge voltage load (surge)

Standards/regulations	EN 61000-4-5

Surge voltage load (surge)

Input	1 kV (Test Level 3 - symmetrical)
	2 kV (Test Level 3 - asymmetrical)
Output	1 kV (Test Level 3 - symmetrical)
	2 kV (Test Level 3 - asymmetrical)
Signal	1 kV (Test Level 2 - asymmetrical)
Comments	Criterion A

Conducted interference

Standards/regulations	EN 61000-4-6

Conducted interference

Input/output/signal	asymmetrical
Frequency range	0.15 MHz ... 100 MHz
Comments	Criterion A
Voltage	20 V (Test Level 3)

Criteria

Criterion A	Normal operating behavior within the specified limits.
Criterion B	Temporary impairment to operational behavior that is corrected by the device itself.

Drawings

Dimensional drawing

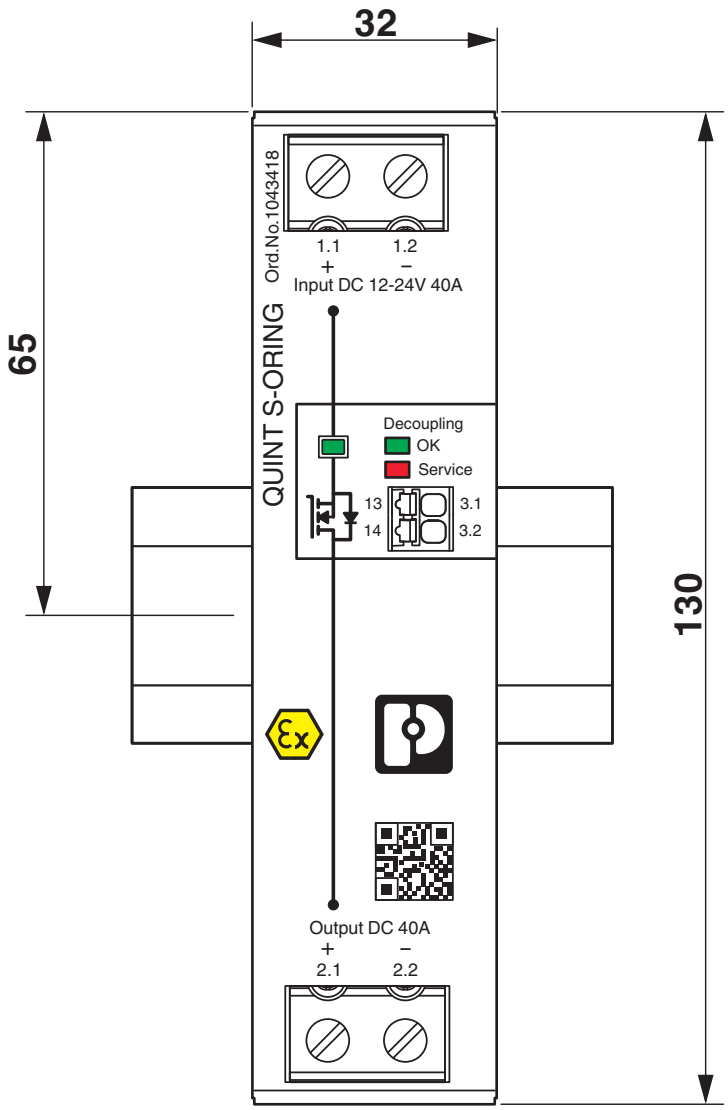

Dimensional drawing

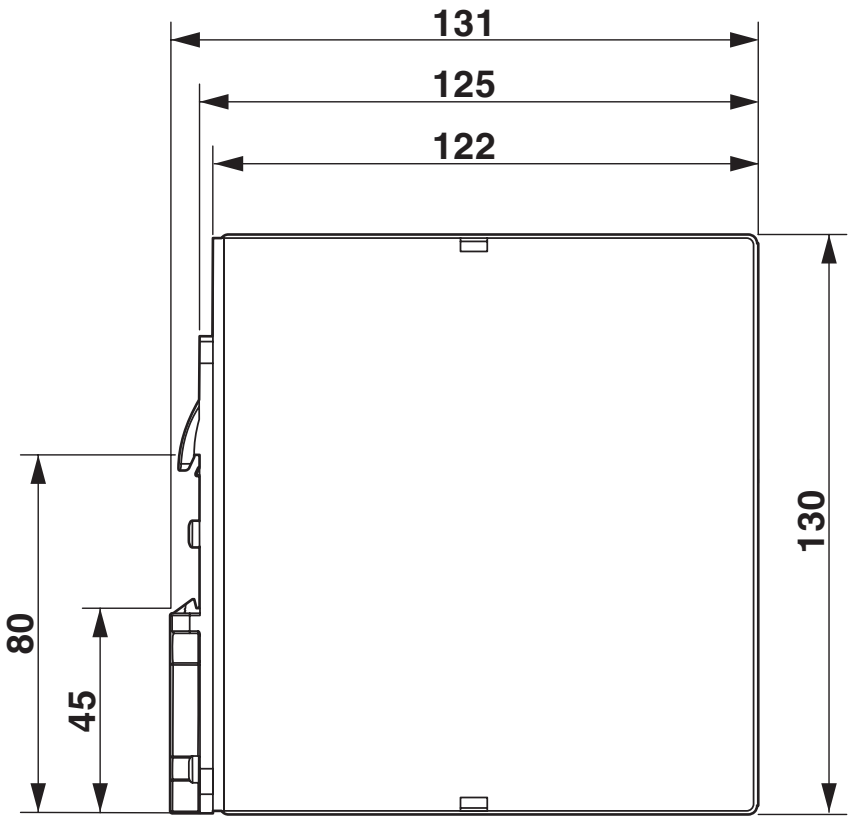

Diagram

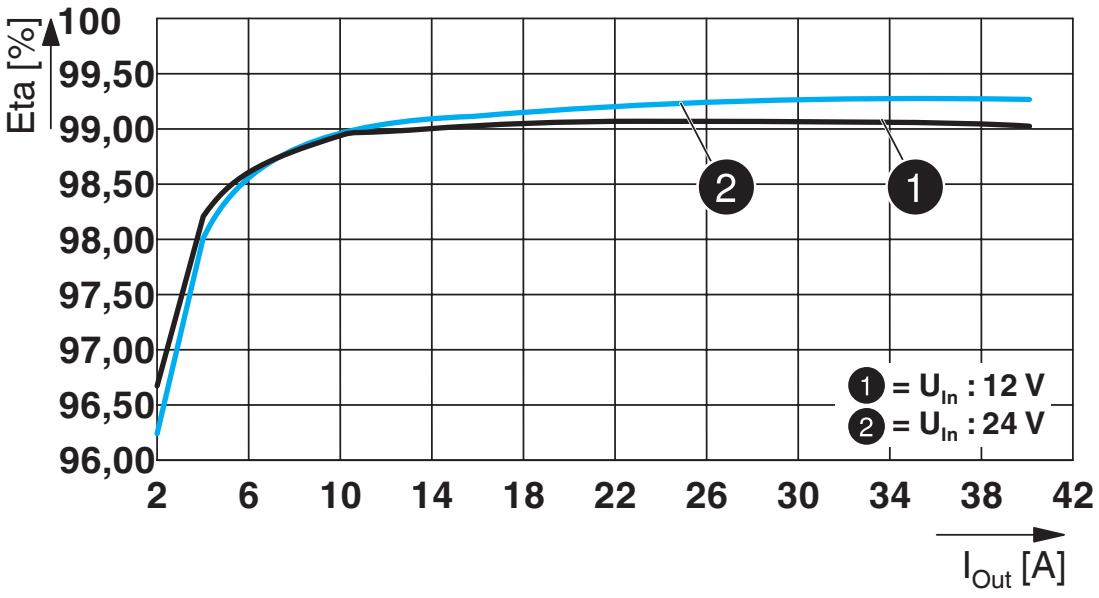

Diagram

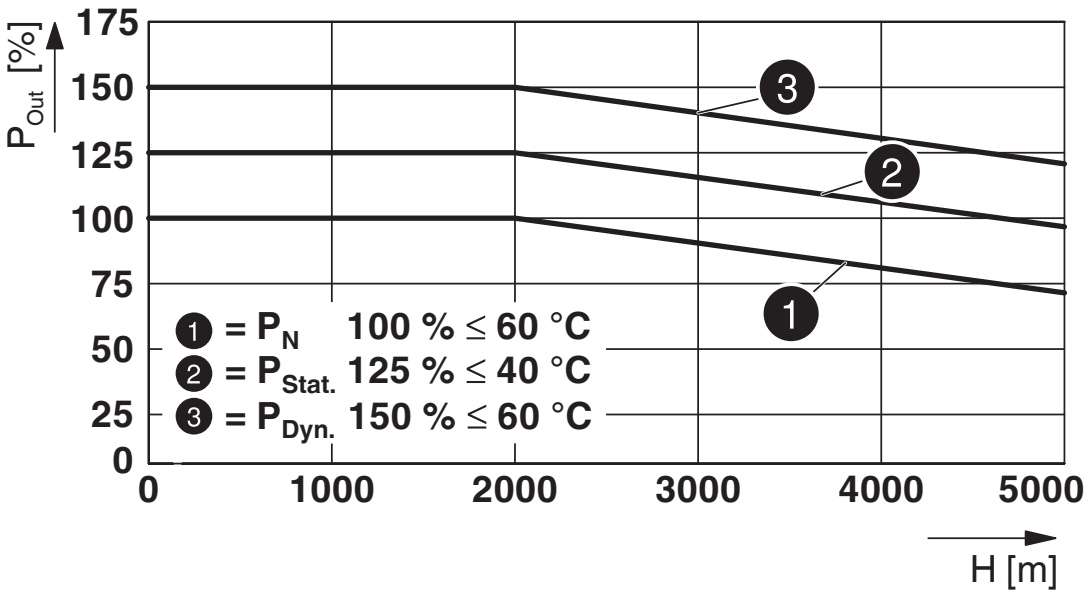

Block diagram

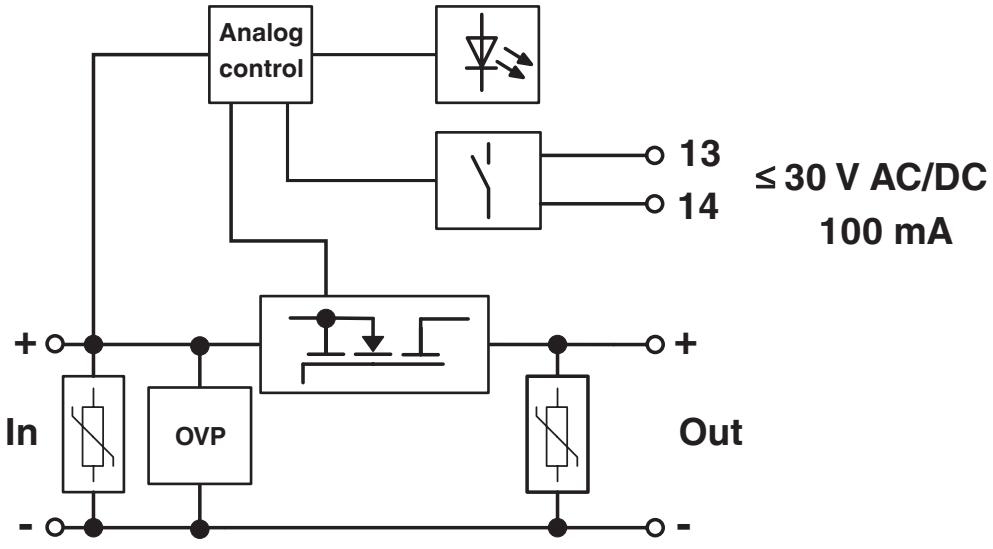

Approvals

To download certificates, visit the product detail page: https://www.phoenixcontact.com/gb/products/1043418

cUL Recognized
Approval ID: E211944

UL Recognized
Approval ID: E211944

EAC
Approval ID: RU S-DE.BL08.W.00764

UL Listed
Approval ID: E123528

cUL Listed
Approval ID: E123528

IECEE CB Scheme
Approval ID: DE/PTZ/0048

cUL Listed
Approval ID: E199827

UL Listed
Approval ID: E199827

IECEx
Approval ID: IECEx SIQ 21.0001X

ATEX
Approval ID: SIQ 21 ATEX 183 X

NEPSI-EX
Approval ID: GYJ21.1004X

UKCA-EX
Approval ID: EXV21UKEX1072X_00

CCC
Approval ID: 2021322303003918

Classifications

ECLASS

ECLASS-13.0	27371010

ETIM

ETIM 9.0	EC000683

UNSPSC

UNSPSC 21.0	32151500

Environmental product compliance

EU RoHS

Fulfills EU RoHS substance requirements	Yes
Exemption	6(c), 7(a), 7(c)-I

China RoHS

Environment friendly use period (EFUP)	EFUP-25
	An article-related China RoHS declaration table can be found in the download area for the respective article under "Manufacturer declaration". For all articles with EFUP-E, no China RoHS declaration table issued and required.

EU REACH SVHC

REACH candidate substance (CAS No.)	Lead(CAS: 7439-92-1)
SCIP	37be0f28-9fa5-448d-b313-15b0791cad97

EF3.1 Climate Change

CO2e kg	11.69 kg CO2e

Phoenix Contact 2026 © - all rights reserved
https://www.phoenixcontact.com

PHOENIX CONTACT Ltd
Halesfield 13, Telford
Shropshire, TF7 4PG
01952 681700
info@phoenixcontact.co.uk