TRIO-PS-IP67/3AC/24DC/20 - Power supply

1039829

https://www.phoenixcontact.com/gb/products/1039829

Please be informed that the data shown in this PDF document is generated from our online catalog. Please find the complete data in the user documentation. Our general terms of use for downloads are valid.



TRIO POWER primary-switched power supply in IP67 die-cast housing, input: 3-phase, output: 24 V DC / 20 A

Your advantages

- Direct installation at the load in the field reduces cable lengths and saves space in the control cabinet
- The robust design (die-cast aluminum housing) ensures high system availability, thanks to resistance to extreme environmental conditions (temperature, dust, and water)
- Reliable startup of high loads, thanks to the dynamic boost
- High efficiency of > 93%, thanks to low power losses

Commercial data

Item number	1039829
Packing unit	1 pc
Minimum order quantity	1 pc
Sales key	CMPF33
Product key	CMPF33
GTIN	4055626595795
Weight per piece (including packing)	4,585 g
Weight per piece (excluding packing)	3,607 g
Customs tariff number	85044095
Country of origin	CN

Technical data

Input data

AC operation

Network type	Star network
Nominal input voltage range	3x 400 V AC ... 500 V AC
	2x 400 V AC ... 500 V AC
Input voltage range	3x 400 V AC ... 500 V AC -20 % ... +15 %
	2x 400 V AC ... 500 V AC -10 % ... +15 %
Input voltage range AC	3x 320 V AC ... 575 V AC
Typical national grid voltage	3x 400 V AC
	3x 480 V AC
Voltage type of supply voltage	AC
Inrush current	typ. 22 A (at 25 °C)
Inrush current integral (I^2t)	0.5 A^2s
Inrush current limitation	≤ 22 A (at 25 °C)
AC frequency range	50 Hz ... 60 Hz
Mains buffering time	typ. 10 ms (400 V AC)
	typ. 20 ms (500 V AC)
Current consumption	3x 1.2 A (400 V AC)
	3x 1 A (500 V AC)
	2x 2.3 A (400 V AC)
	2x 1.9 A (500 V AC)
Nominal power consumption	39 W
Protective circuit	Transient surge protection; Varistor
Typical response time	< 1 s
Input fuse	3.15 A (internal (device protection), slow-blow)
Recommended breaker for input protection	6 A ... 16 A (Characteristics B, C, D, K)
Discharge current to PE	< 3.5 mA
	< (550 V AC, 60 Hz)
Voltage type of supply voltage	AC
Mains buffering time	> 15 ms (230 V AC)
Current consumption	4.9 A (110 V DC)
	2.1 A (250 V DC)

Output data

Efficiency	93 % (400 V AC)
	93 % (500 V AC)
Nominal output voltage	24 V DC ±1 %
Nominal output current (I_N)	20 A
Dynamic Boost ($I_{Dyn.Boost}$)	30 A (5 s)
Derating	> 60 °C ... 70 °C (2.5 %/K)
Protection against overvoltage at the output (OVP)	≤ 30 V DC

Control deviation	< 1 % (change in load, static 10 % ... 90 %)
	< 3 % (Dynamic load change 10 % ... 90 %, 10 Hz)
	< 0.1 % (change in input voltage ±10 %)
Residual ripple	≤ 20 mV_{PP}
Short-circuit-proof	yes
Output power	480 W
	720 W
Maximum no-load power dissipation	< 2 W (400 V AC)
	< 2.5 W (480 V AC)
Power loss nominal load max.	< 44 W (400 V AC)
	< 44 W (480 V AC)
Rise time	≤ 120 ms (U_{OUT} (10 % ... 90 %))

Signal: DC OK

Maximum switching voltage	30 V AC/DC
Continuous load current	100 mA

Signal relay 13/14

Default	closed
Digital	30 V AC 30 V DC 100 mA

Connection data

Input

Connection method	M12 circular connector
Coding	S
Type of locking	M12 screw locking
Number of positions	4

Output

Connection method	M17 circular connector
Coding	N
Type of locking	M17 standard and SPEEDCON locking
Number of positions	4

Signal

Connection method	Circular connector
Coding	A
Type of locking	SPEEDCON M12
Number of positions	5

Signaling

Types of signaling	LED
	Floating signal contact

Signal output: LED status indicator

Signalization designation	DC OK

Status display	LED
Color	green
DC OK	U_{OUT} > 0.9 x U_N (U_N = 24 V DC)
13/14	U_{OUT} > 0.9 x U_N (U_N = 24 V DC)

Electrical properties

Number of phases	3
Insulation voltage input/output	4 kV AC (type test)
	1.5 kV AC (routine test)

Product properties

Product type	Power supply
Product family	TRIO POWER
MTBF (IEC 61709, SN 29500)	> 1500000 h (25 °C)
	> 620000 h (40 °C)
	> 230000 h (60 °C)

Insulation characteristics

Protection class	I
Overvoltage category (EN 61010-1)	III (≤ 2000 m)
	II (≤ 4000 m)
Pollution degree	2 (IEC 61010-1)

Dimensions

Item dimensions

Width	151 mm
Height	304 mm
Depth	120 mm

Drill hole

Diameter	5.6 mm

Installation dimensions

Installation distance right/left	20 mm / 20 mm
Installation distance top/bottom	50 mm / 100 mm

Mounting

Mounting type	Panel mounting
Assembly note	alignable: 20 mm horizontally, 50 mm vertically above, 100 mm vertically below
With protective coating	no

Material specifications

Flammability rating according to UL 94 (housing / terminal blocks)	V0
Housing material	Metal

Type of housing	Aluminum (AlMg3)

Environmental and real-life conditions

Ambient conditions

Degree of protection	IP67
Ambient temperature (operation)	-25 °C ... 85 °C (Derating > 60 °C (3 AC): 2,5 %/K / > 50 °C (2 AC): 2,5 %/K)
Ambient temperature (storage/transport)	-40 °C ... 85 °C
Ambient temperature (start-up type tested)	-40 °C
Maximum altitude	≤ 4000 m (> 2000 m, Derating: 10 %/1000 m)
Climatic class	3K3 (in acc. with EN 60721)
Max. permissible relative humidity (operation)	≤ 95 % (at 25 °C, non-condensing)
Shock	18 ms, 30g, in each space direction (according to IEC 60068-2-27)
Vibration (operation)	in each space direction (in acc. with EN 60068-2-6) 10 Hz ... 19.9 Hz, ±2.5 mm amplitude, 19.9 Hz ... 150 Hz, 4g acceleration

Standards and regulations

Standard – Limitation of mains harmonic currents	EN 61000-3-2
Standard - Electrical safety	IEC 61010-2-201 (SELV)
Standard – Safety extra-low voltage	EN 60204-1 (PELV)
Standard - Safe isolation	DIN VDE 0100-410

Approvals

Conformity/Approvals

SIL in accordance with IEC 61508	0
Performance level according to ISO 13849	without

EMC data

Electromagnetic compatibility	Conformance with EMC Directive 2014/30/EU
Low Voltage Directive	Conformance with Low Voltage Directive 2014/35/EC
Interference emission	Interference emission in accordance with EN 61000-6-3 (residential and commercial) and EN 61000-6-4 (industrial)
Noise immunity	Immunity in accordance with EN 61000-6-1 (residential), EN 61000-6-2 (industrial)

Conducted noise emission

Standards/regulations	EN 55016
	EN 61000-6-3 (Class B)

Noise emission

Standards/regulations	EN 55011 (EN 55022)

Noise emission

Standards/regulations	EN 55016
	EN 61000-6-3 (Class B)

Harmonic currents

Frequency range	Class A

Flicker

Standards/regulations	EN 61000-3-3
Frequency range	0 kHz ... 2 kHz

Electrostatic discharge

Standards/regulations	EN 61000-4-2

Electrostatic discharge

Contact discharge	6 kV (Test Level 4)
Discharge in air	8 kV (Test Level 4)
Comments	Criterion A

Electromagnetic HF field

Standards/regulations	EN 61000-4-3

Electromagnetic HF field

Frequency range	80 MHz ... 1 GHz
Test field strength	10 V/m (Test Level 3)
Frequency range	1 GHz ... 2 GHz
Test field strength	10 V/m (Test Level 3)
Frequency range	2 GHz ... 3 GHz
Test field strength	10 V/m (Test Level 3)
Comments	Criterion A

Fast transients (burst)

Standards/regulations	EN 61000-4-4

Fast transients (burst)

Input	4 kV (Test Level 4 - asymmetrical)
Output	2 kV (Test Level 3 - asymmetrical)
Signal	1 kV (Test Level 2 - asymmetrical)
Comments	Criterion A

Surge voltage load (surge)

Standards/regulations	EN 61000-4-5

Surge voltage load (surge)

Input	2 kV (Test Level 3 - symmetrical)
	4 kV (Test Level 4 - asymmetrical)
Output	1 kV (Test Level 2 - symmetrical)
	2 kV (Test Level 1 - asymmetrical)
Signal	1 kV (Test Level 1 - asymmetrical)
Comments	Criterion B

Conducted interference

Standards/regulations	EN 61000-4-6

Conducted interference

Input/Output	asymmetrical
Frequency range	0.15 MHz ... 80 MHz
Comments	Criterion A
Voltage	10 V (Test Level 3)

Voltage dips

Standards/regulations	EN 61000-4-11
Voltage	400 V AC
Frequency	50 Hz
Voltage dip	70 %
Number of periods	25 periods
Additional text	Test Level 2
Comments	Criterion A
Voltage dip	40 %
Number of periods	10 periods
Additional text	Test Level 2
Comments	Criterion A
Voltage dip	0 %
Number of periods	1 period
Additional text	Test Level 2
Comments	Criterion A

Emitted interference

Standards/regulations	EN 61000-6-3
Radio interference voltage in acc. with EN 55011	EN 55011 (EN 55022) Class B, area of application: Industry and residential
Emitted radio interference in acc. with EN 55011	EN 55011 (EN 55022) Class B, area of application: Industry and residential

Criteria

Criterion A	Normal operating behavior within the specified limits.
Criterion B	Temporary impairment to operational behavior that is corrected by the device itself.
Criterion C	Temporary adverse effects on the operating behavior, which the device corrects automatically or which can be restored by actuating the operating elements.

Drawings

Block diagram

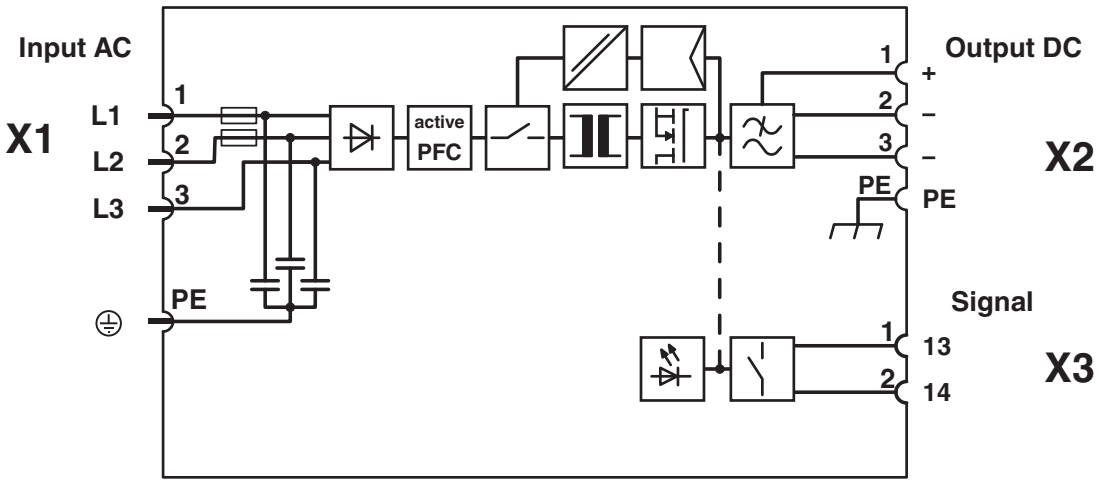

Classifications

ECLASS

ECLASS-13.0	27040701

ETIM

ETIM 9.0	EC002540

UNSPSC

UNSPSC 21.0	39121000

Environmental product compliance

EU RoHS

Fulfills EU RoHS substance requirements	Yes
Exemption	6(c), 7(a), 7(c)-I

China RoHS

Environment friendly use period (EFUP)	EFUP-25
	An article-related China RoHS declaration table can be found in the download area for the respective article under "Manufacturer declaration". For all articles with EFUP-E, no China RoHS declaration table issued and required.

EU REACH SVHC

REACH candidate substance (CAS No.)	Diboron trioxide(CAS: 1303-86-2)
	Lead monoxide (lead oxide)(CAS: 1317-36-8)
	Lead(CAS: 7439-92-1)
SCIP	4b7a785c-62ed-4b11-887c-788e585952d7

EF3.1 Climate Change

CO2e kg	56.33 kg CO2e

Phoenix Contact 2026 © - all rights reserved
https://www.phoenixcontact.com

PHOENIX CONTACT Ltd
Halesfield 13, Telford
Shropshire, TF7 4PG
01952 681700
info@phoenixcontact.co.uk