AXL F RTD4 XC 1H - Temperature module

1035430

https://www.phoenixcontact.com/gb/products/1035430

Please be informed that the data shown in this PDF document is generated from our online catalog. Please find the complete data in the user documentation. Our general terms of use for downloads are valid.

CRA-READY



The figure shows the standard item

Axioline F, Temperature recording module, Analog inputs: 4 (for resistance temperature detectors), connection technology: 2-, 3-, 4-conductor (shielded), transmission speed in the local bus: 100 Mbps, Extreme conditions version, degree of protection: IP20, including bus base module and Axioline F connectors; The product is being prepared for compliance with the Cyber Resilience Act (CRA).

Product description

The module is designed for use within an Axioline F station. It is used to acquire signals from resistive temperature sensors. The module supports all common platinum and nickel sensors in accordance with DIN EN 60751 and SAMA. Cu10, Cu50, Cu53 sensors as well as various KTY8x sensor types are also supported.

Your advantages

- 4 analog input channels for connecting resistance temperature detectors (RTDs)
- 500 Ω and 5 kΩ linear inputs
- Connection of sensors in 2-, 3-, and 4-conductor technology
- Integrated, digital sensor linearization
- Standardized measured value representation directly in °C, °F or Ω
- Measured value display in 16-bit format or floating point format
- Programmable filters
- Short-circuit protected inputs
- Temperature stability
- Very high level of noise immunity
- Low noise emission
- Installation monitoring by means of “Channel scout” function
- Can be used under extreme ambient conditions
- Extended temperature range of -40 °C ... +70 °C (see “Tested successfully: use under extreme ambient conditions” in the data sheet)
- Partially coated PCBs
- Device rating plate stored



Commercial data

Item number	1035430
Packing unit	1 pc
Minimum order quantity	1 pc
Sales key	DRI243
Product key	DRI243
GTIN	4055626541839
Weight per piece (including packing)	216.566 g
Weight per piece (excluding packing)	144 g
Customs tariff number	85389091
Country of origin	DE

Technical data

Dimensions

Dimensional drawing	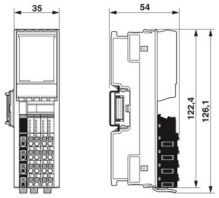
Width	35 mm
Height	126.1 mm
Depth	54 mm
Note on dimensions	The depth applies when a TH 35-7.5 DIN rail is used (in accordance with EN 60715).

Notes

Note on application	Only for industrial use
Note on application	As things stand now, we are preparing the product so that, as of December 11, 2027, it will comply with the requirements of the EU Cyber Resilience Act (CRA) based on the information currently available regarding the CRA.

Mounting

Mounting type	DIN rail mounting
Mounting position	any (no temperature derating)

Material specifications

Color (Housing)	gray (RAL 7042)

Interfaces

Axioline F local bus

Number of interfaces	2
Connection method	Bus base module
Transmission speed	100 Mbps

System properties

Programming data

Input address area	8 Byte
Output address area	0 Byte

Fieldbus data telegram (PROFIBUS)

Required parameter data	12 Byte
Required configuration data	6 Byte

Input data

Analog:

Input name	Analog inputs
Description of the input	Inputs for resistive temperature sensors
Number of inputs	4 (for resistance temperature detectors)
Connection method	Push-in connection
Connection technology	2-, 3-, 4-conductor (shielded)
A/D converter resolution	24 bit
Sensor types (RTD) that can be used	Pt, Ni, KTY, Cu sensors
Tolerance, relative	see tables for tolerance values
Tolerance, absolute	typ. ± 0.1 K (Pt 100 with 3-wire connection)
	see tables for tolerance values
Data formats	IB IL, S7-compatible
Measured value representation	16 bits (15 bits + sign bit)
Input filter time	40 ms
	60 ms
	100 ms
	120 ms (adjustable)
Nominal value of the current sources	1 mA (Pt 100, Ni 100, R_{Lin} 500 Ω; pulse current, the specification is valid during the sampling phase)
	210 µA (Pt 1000, Ni 1000, R_{Lin} 5000 Ω; pulse current, the specification is valid during the sampling phase)
Differential non-linearity	typ. 1 ppm / ±0.0001 % (in all ranges)
Integral non-linearity	typ. 30 ppm / ±0.003 % (Pt 100)
	typ. 20 ppm / ±0.002 % (R_{Lin} 500 Ω)
	typ. 200 ppm / ±0.02 % (R_{Lin} 5000 Ω)
Linear resistance measuring range	0 Ω ... 500 Ω
	0 kΩ ... 5 kΩ
Protective circuit	Short-circuit protection, overload protection of the inputs
	Transient protection of inputs
	Transient protection of sensor supplies

Product properties

Product type	I/O component
Product family	Axioline F
Type	block modular
Mounting position	any (no temperature derating)
Scope of supply	including bus base module and Axioline F connectors
Special properties	The product is being prepared for compliance with the Cyber Resilience Act (CRA)
	Extreme conditions version

Insulation characteristics

Overvoltage category	II (IEC 60664-1, EN 60664-1)

Pollution degree	2 (IEC 60664-1, EN 60664-1)

Electrical properties

Maximum power dissipation for nominal condition	1.1 W

Potentials: Axioline F local bus supply (U_{Bus})

Supply voltage	5 V DC (via bus base module)
Current draw	max. 140 mA

Potentials: Supply for analog modules (U_A)

Supply voltage	24 V DC
Supply voltage range	19.2 V DC ... 30 V DC (including all tolerances, including ripple)
Current draw	max. 17 mA
Protective circuit	Surge protection; electronic (35 V, 0.5 s)
	Reverse polarity protection; Polarity protection diode
	Transient protection; Suppressor diode

Electrical isolation/isolation of the voltage ranges

Test voltage: 5 V supply of the local bus (U_{Bus}) / 24 V supply (I/Os)	500 V AC, 50 Hz, 1 min
Test voltage: 5 V supply of the local bus (U_{Bus}) / analog inputs	500 V AC, 50 Hz, 1 min
Test voltage: 5 V supply of the local bus (U_{Bus}) / functional ground	500 V AC, 50 Hz, 1 min
Test voltage: 24 V supply (I/O) / analog inputs	500 V AC, 50 Hz, 1 min
Test voltage: 24 V supply (I/O) / functional ground	500 V AC, 50 Hz, 1 min
Test voltage: Analog inputs / functional ground	500 V AC, 50 Hz, 1 min

Connection data

Connection technology

Connection name	Axioline F connector
Note on the connection method	Please observe the information provided on conductor cross-sections in the “Axioline F: system and installation” user manual.

Axioline F connector

Connection method	Push-in connection
Note on the connection method	Please observe the information provided on conductor cross-sections in the “Axioline F: system and installation” user manual.
Conductor cross-section, rigid	0.2 mm² ... 1.5 mm²
Conductor cross-section, flexible	0.2 mm² ... 1.5 mm²
Conductor cross-section AWG	24 ... 16
Stripping length	8 mm

Environmental and real-life conditions

Ambient conditions

Ambient temperature (operation)	-25 °C ... 60 °C (Standard, applications with UL approval, use in zone 2 potentially explosive area)
	-40 °C ... 70 °C (Extended, see section “Tested successfully: use

	under extreme ambient conditions” in the data sheet.)
Degree of protection	IP20
Air pressure (operation)	70 kPa ... 106 kPa (up to 3000 m above sea level)
Air pressure (storage/transport)	70 kPa ... 106 kPa (up to 3000 m above sea level)
Ambient temperature (storage/transport)	-40 °C ... 85 °C
Permissible humidity (operation)	5 % ... 95 % (non-condensing)
Permissible humidity (storage/transport)	5 % ... 95 % (non-condensing)

Mechanical test

Vibration resistance in accordance with EN 60068-2-6/IEC 60068-2-6	5g
Shock in accordance with EN 60068-2-27/IEC 60068-2-27	30g
Continuous shock in accordance with EN 60068-2-27/IEC 60068-2-27	10g

Test (noxious gas)

Test standard	ISA-71.04-2013 G3 Harsh Group A
	IEC 60068-2-60:2015 Method 4
Temperature	25 °C ±1 K
Humidity (relative)	75 % ±3 %
Test duration	21 Days
Volume concentration H_2S (Hydrogen sulfide)	50 ppb
Volume concentration NO_2 (Nitrogen dioxide)	1250 ppb
Volume concentration Cl_2 (Chlorine)	10 ppb
Volume concentration SO_2 (Sulfur dioxide)	300 ppb

Standards and regulations

Protection class	III (IEC 61140, EN 61140, VDE 0140-1)

Approvals

ATEX

Identification	Ⓔx II 3 G Ex ec IIC T4 Gc
Certificate	UL 20 ATEX 2441X

IECEx

Identification	Ex ec IIC T4 Gc
Certificate	IECEx ULD 20.0026X

UL, USA/Canada

Identification	cULus
Certificate	E238705

UL Ex, USA / Canada

Identification	Class I, Zone 2, AEx ec IIC T4
	Class I, Division 2, Groups A, B, C, D, T4
	Ex ec IIC T4 Gc X
Certificate	E366272

CCC / China-Ex

Identification	Ex ec IIC T4 Gc
Certificate	

Drawings

Dimensional drawing

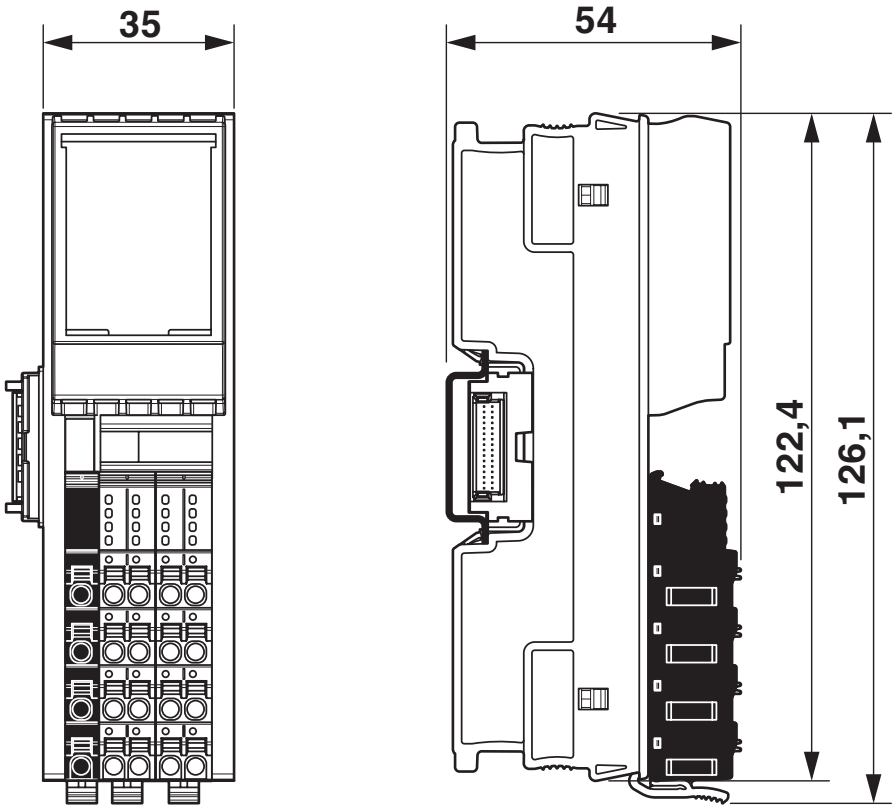

Dimensional drawing

Connection diagram

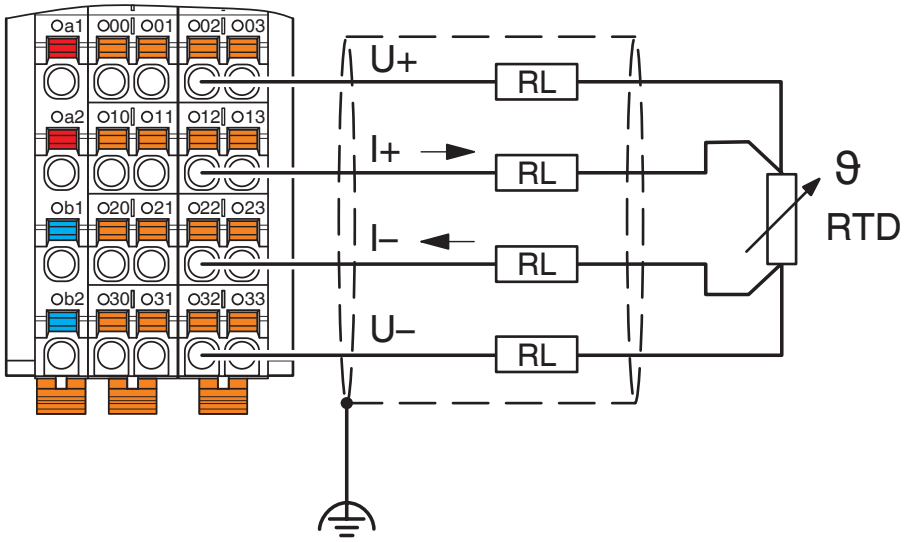

Connection example: 4-conductor connection

Connection diagram

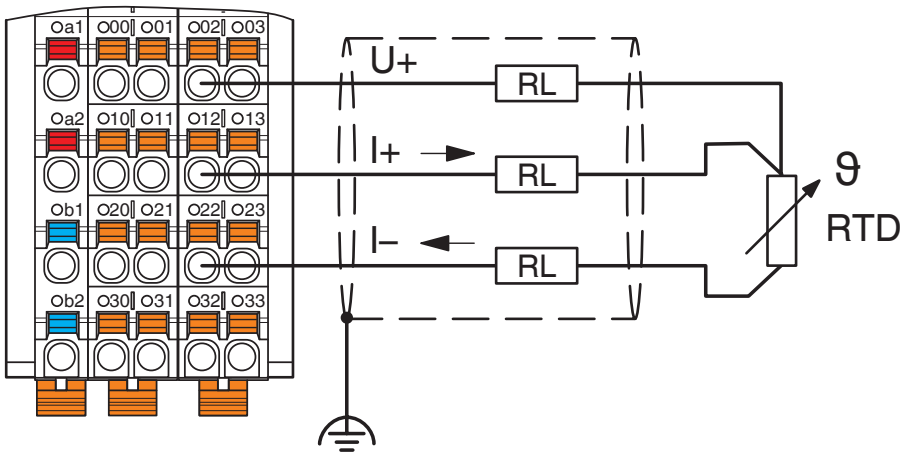

Connection example: 3-conductor connection

Connection diagram

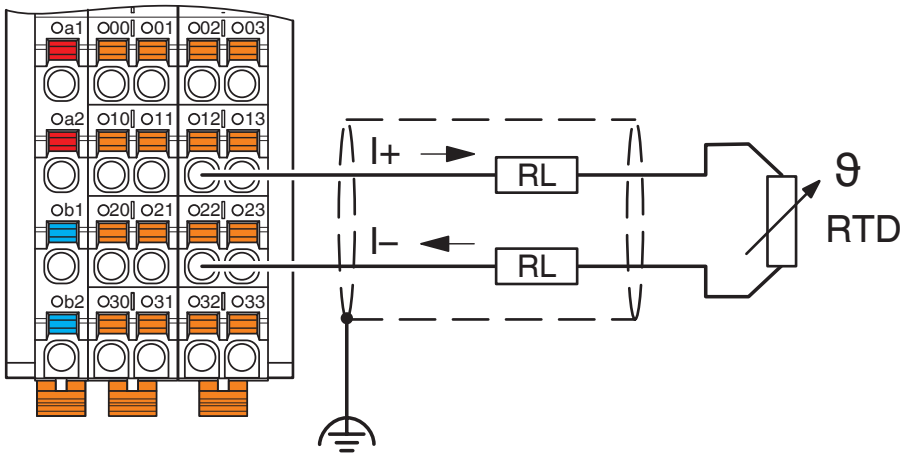

Connection example: 2-conductor connection

Connection diagram

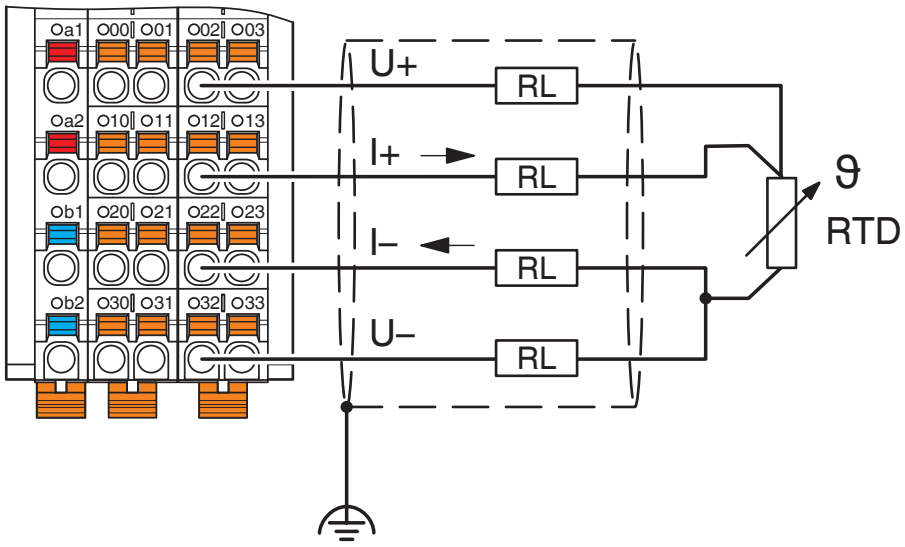

Connection example: 4-conductor connection for 3-conductor sensor with very long supply lines (> 100 m)

Block diagram

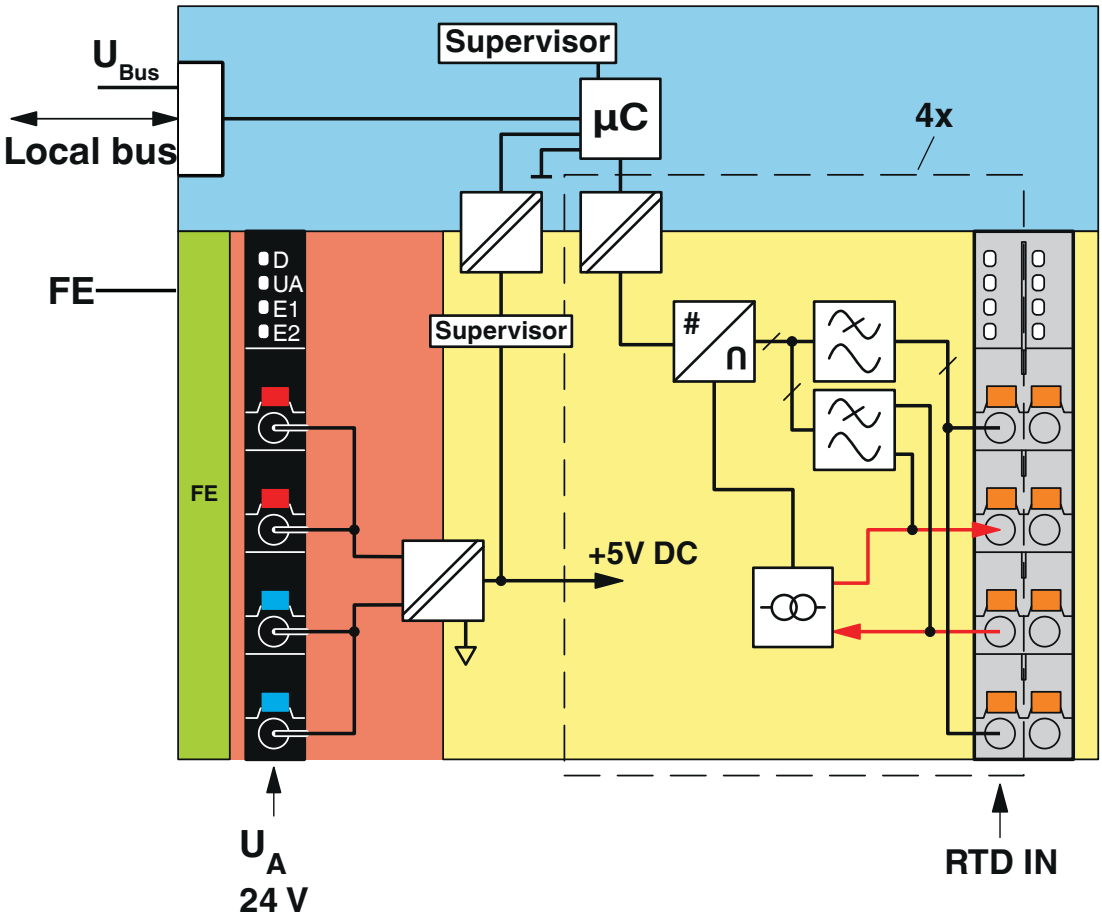

Internal wiring of the terminal points

Approvals

To download certificates, visit the product detail page: https://www.phoenixcontact.com/gb/products/1035430

BSH
Approval ID: 840c

IECEx
Approval ID: IECEx ULD 20.0026X

ATEX
Approval ID: UL 20 ATEX 2441X

cULus Listed
Approval ID: E366272

CCC
Approval ID: 2021122309114456

Classifications

ECLASS

ECLASS-13.0	27242601
ECLASS-15.0	27242601

ETIM

ETIM 10.0	EC001596

UNSPSC

UNSPSC 21.0	32151600

Environmental product compliance

EU RoHS

Fulfills EU RoHS substance requirements	Yes
Exemption	7(a), 7(c)-I

China RoHS

Environment friendly use period (EFUP)	EFUP-50
	An article-related China RoHS declaration table can be found in the download area for the respective article under "Manufacturer declaration". For all articles with EFUP-E, no China RoHS declaration table issued and required.

EU REACH SVHC

REACH candidate substance (CAS No.)	Lead(CAS: 7439-92-1)
SCIP	8c476df3-9884-4104-9cb2-7d3b47eff882

Phoenix Contact 2026 © - all rights reserved
https://www.phoenixcontact.com

PHOENIX CONTACT Ltd
Halesfield 13, Telford
Shropshire, TF7 4PG
01952 681700
info@phoenixcontact.co.uk