AXL F IOL8 2H - Communication module

1027843

https://www.phoenixcontact.com/gb/products/1027843

Please be informed that the data shown in this PDF document is generated from our online catalog. Please find the complete data in the user documentation. Our general terms of use for downloads are valid.

CRA-READY



Axioline F, IO-Link master, IO-Link ports Class A: 8, connection method: Push-in connection, connection technology: 3-conductor, transmission speed in the local bus: 100 Mbps, degree of protection: IP20, including bus base module and Axioline F connectors; The product is being prepared for compliance with the Cyber Resilience Act (CRA).

Product description

The module is designed for use within an Axioline F station. The IO-Link master enables the operation of up to eight IO-Link devices. Alternatively, you can connect a standard digital sensor or actuator to each port. When used in combination with the Axioline F bus coupler, the IO-Link master is the connecting element that integrates IO-Link devices into a higher-level bus system.

Your advantages

- Connection of eight IO-Link devices
- Alternatively: connection of one digital sensor or actuator per port
- Connection of IO-Link devices in 3-conductor technology
- Connection of sensors in 3-conductor technology
- Connection of actuators in 2- and 3-conductor technology
- Parameter data storage on the master
- IO-Link specification V1.1.2
- Substitute value behavior of inputs and outputs can be parameterized for each port
- Supports IOL-CONF (firmware version 1.02 or later)
- Device rating plate stored



Commercial data

Item number	1027843
Packing unit	1 pc
Minimum order quantity	1 pc
Sales key	DRI253
Product key	DRI253
GTIN	4055626523552
Weight per piece (including packing)	205.3 g
Weight per piece (excluding packing)	204 g
Customs tariff number	85176200
Country of origin	DE

Technical data

Dimensions

Dimensional drawing	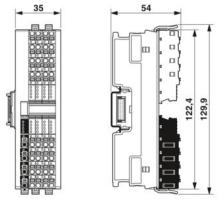
Width	35 mm
Height	129.9 mm
Depth	54 mm
Note on dimensions	The depth applies when a TH 35-7.5 DIN rail is used (in accordance with EN 60715).

Notes

Note on application	Only for industrial use
Note on application	As things stand now, we are preparing the product so that, as of December 11, 2027, it will comply with the requirements of the EU Cyber Resilience Act (CRA) based on the information currently available regarding the CRA.

Mounting

Mounting type	DIN rail mounting
Mounting position	any (no temperature derating)

Material specifications

Color (Housing)	gray (RAL 7042)

Interfaces

Axioline F local bus

Number of interfaces	2
Connection method	Bus base module
Transmission speed	100 Mbps

System properties

Programming data

Process data channel	512 bit
Input address area	64 Byte
Output address area	64 Byte

Input data

Digital

Description of the input	IO-Link ports in digital input (DI) mode
Number of inputs	max. 8 (IEC 61131-2 type 1)
Connection method	Push-in connection
Connection technology	3-conductor
Nominal input voltage U_{IN}	24 V DC
Input voltage range "0" signal	-0.3 V DC ... 5 V DC
Input voltage range "1" signal	11 V DC ... 30 V DC
Nominal input current	typ. 2.5 mA
Sensor current per channel	max. 1 A (from L+/L-)
Input filter time	1 µs

IO-Link

Number of ports	8
Connection method	Push-in connection
Connection technology	3-conductor
Port type	Class A

Output data

Digital

Output description	IO-Link ports in digital output (DO) mode
Connection method	Push-in connection
Connection technology	2-, 3-conductor
Number of outputs	max. 8
Nominal output voltage	24 V DC
Nominal current per channel	200 mA

Product properties

Product type	I/O component
Product family	Axioline F
Type	block modular
Mounting position	any (no temperature derating)
Scope of supply	including bus base module and Axioline F connectors
Special properties	The product is being prepared for compliance with the Cyber Resilience Act (CRA)

Insulation characteristics

Overvoltage category	II (IEC 60664-1, EN 60664-1)
Pollution degree	2 (IEC 60664-1, EN 60664-1)

Electrical properties

Maximum power dissipation for nominal condition	1.7 W

Supply: IO-Link

Nominal voltage for I/O supply	24 V DC
Supply voltage range	18 V DC ... 30 V DC (including all tolerances, including ripple)

Nominal current for every IO-Link port	1 A (at L+/L-)
	200 mA (at C/Q)
Protective circuit	Overload protection for L+; electronically limited to 1.2 A
	Short-circuit protection for L+; by switching off after 5 ms

Potentials: Axioline F local bus supply (U_{Bus})

Supply voltage	5 V DC (via bus base module)
Current draw	max. 50 mA

Potentials: Feed-in of the supply voltage for the I/O devices (U_O), including IO-Link port supply

Supply voltage	24 V DC
Supply voltage range	18 V DC ... 30 V DC (including all tolerances, including ripple)
Current draw	max. 8 A (in total, current consumption of I/O circuit and at C/Q as DO and at L+/L-)
	max. 60 mA (without connected peripherals)
Current consumption	typ. 46 mA (without connected peripherals)
Protective circuit	Surge protection; electronic (35 V, 0.5 s)
	Reverse polarity protection; parallel diode; with external 5 A fuse (only for commissioning)
Protection	max. 8 A (polarity reversal protection up to 5 A)

Electrical isolation/isolation of the voltage ranges

Test voltage: 5 V supply of the local bus (U_{Bus}) / 24 V supply (I/Os)	500 V AC, 50 Hz, 1 min
Test voltage: 5 V supply of the local bus (U_{Bus}) / functional ground	500 V AC, 50 Hz, 1 min
Test voltage: 24 V supply (I/O) / functional ground	500 V AC, 50 Hz, 1 min

Connection data

Connection technology

Connection name	Axioline F connector
Note on the connection method	Please observe the information provided on conductor cross-sections in the “Axioline F: system and installation” user manual.

Axioline F connector

Connection method	Push-in connection
Note on the connection method	Please observe the information provided on conductor cross-sections in the “Axioline F: system and installation” user manual.
Conductor cross-section, rigid	0.2 mm² ... 1.5 mm²
Conductor cross-section, flexible	0.2 mm² ... 1.5 mm²
Conductor cross-section AWG	24 ... 16
Stripping length	8 mm

Environmental and real-life conditions

Ambient conditions

Ambient temperature (operation)	-25 °C ... 60 °C
Degree of protection	IP20

Air pressure (operation)	70 kPa ... 106 kPa (up to 3000 m above sea level)
Air pressure (storage/transport)	70 kPa ... 106 kPa (up to 3000 m above sea level)
Ambient temperature (storage/transport)	-40 °C ... 85 °C
Permissible humidity (operation)	5 % ... 95 % (non-condensing)
Permissible humidity (storage/transport)	5 % ... 95 % (non-condensing)

Mechanical test

Vibration resistance in accordance with EN 60068-2-6/IEC 60068-2-6	5g
Shock in accordance with EN 60068-2-27/IEC 60068-2-27	30g
Continuous shock in accordance with EN 60068-2-27/IEC 60068-2-27	10g

Standards and regulations

Protection class	III (IEC 61140, EN 61140, VDE 0140-1)

Drawings

Dimensional drawing

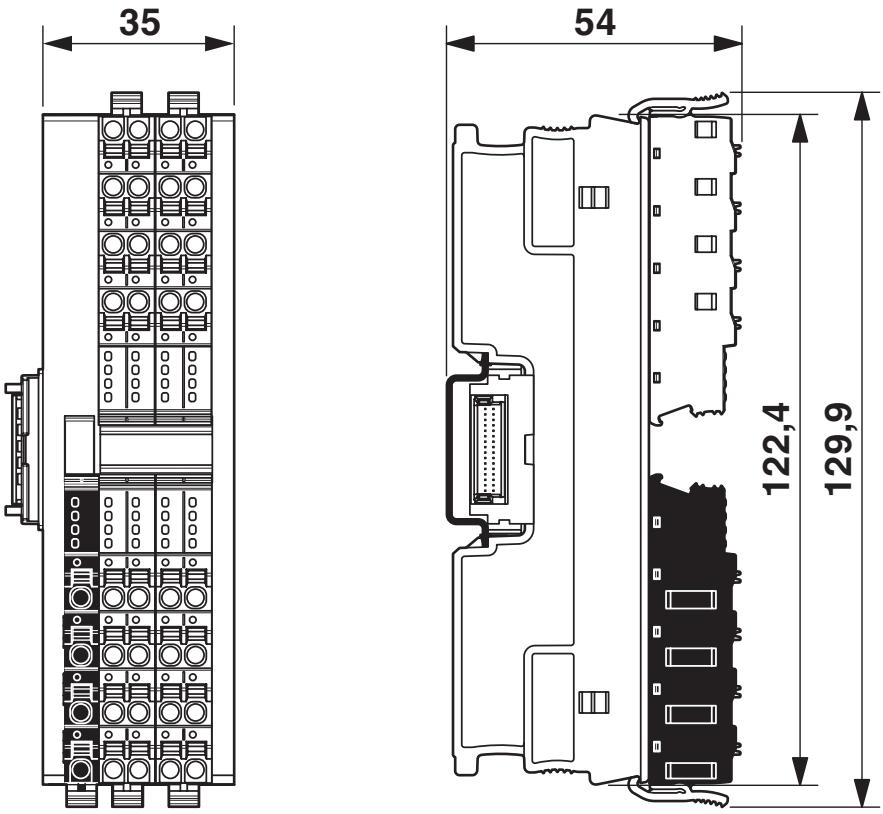

Dimensions (in mm)

Connection diagram

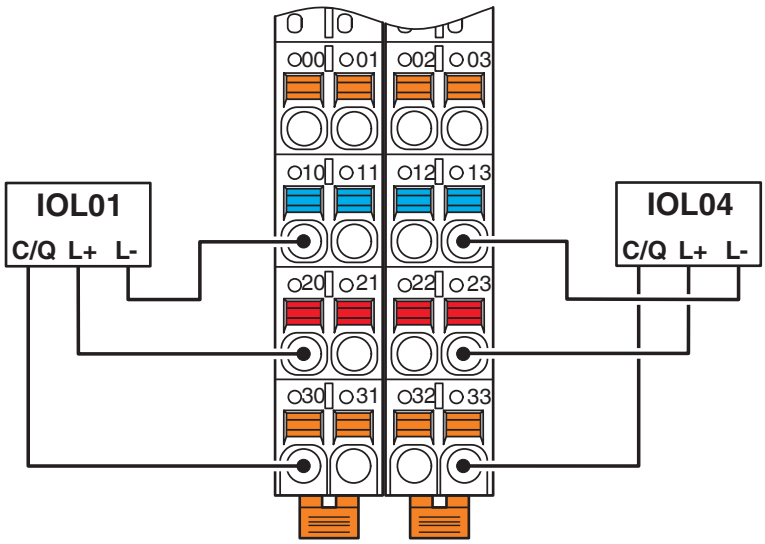

Connection example

Connection diagram

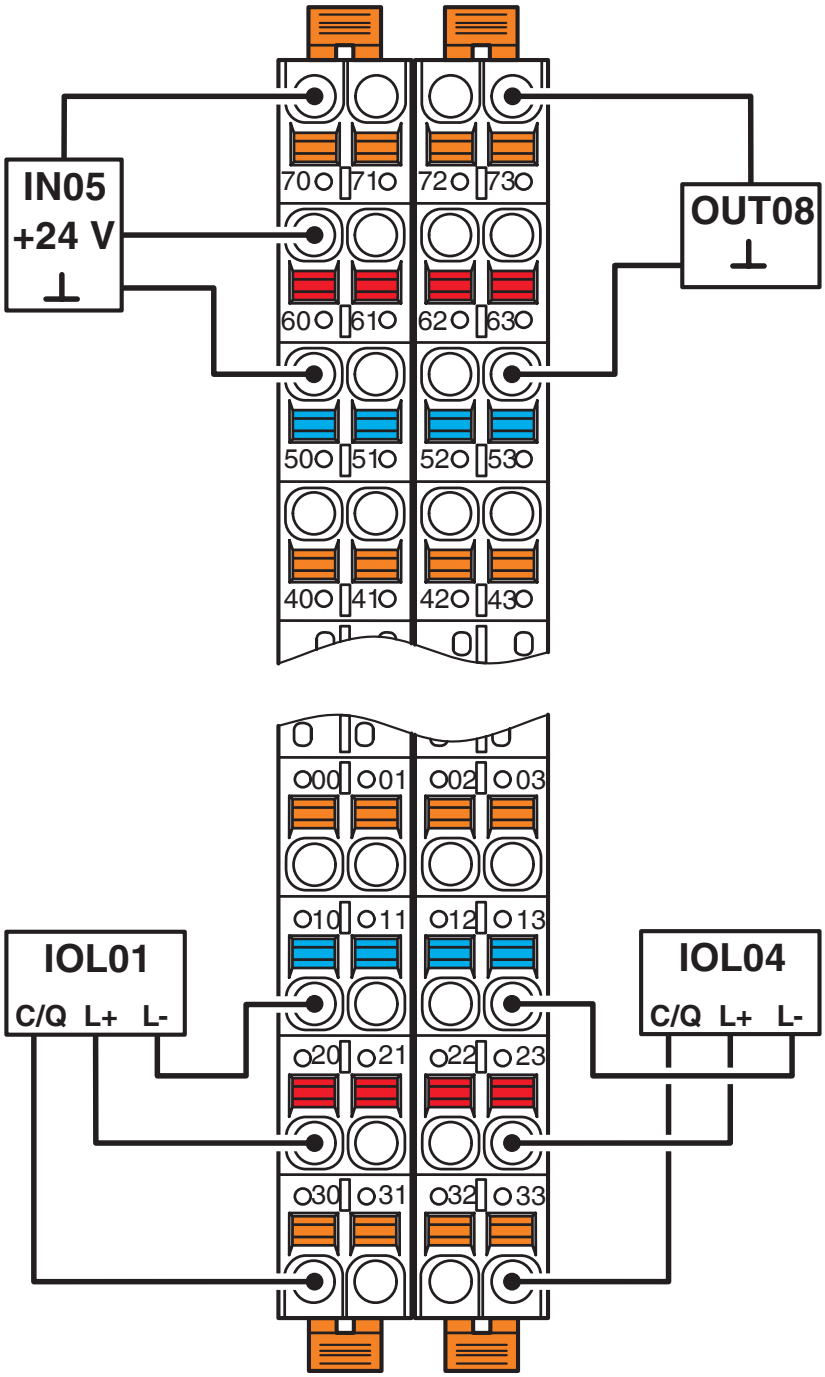

Connection example

Block diagram

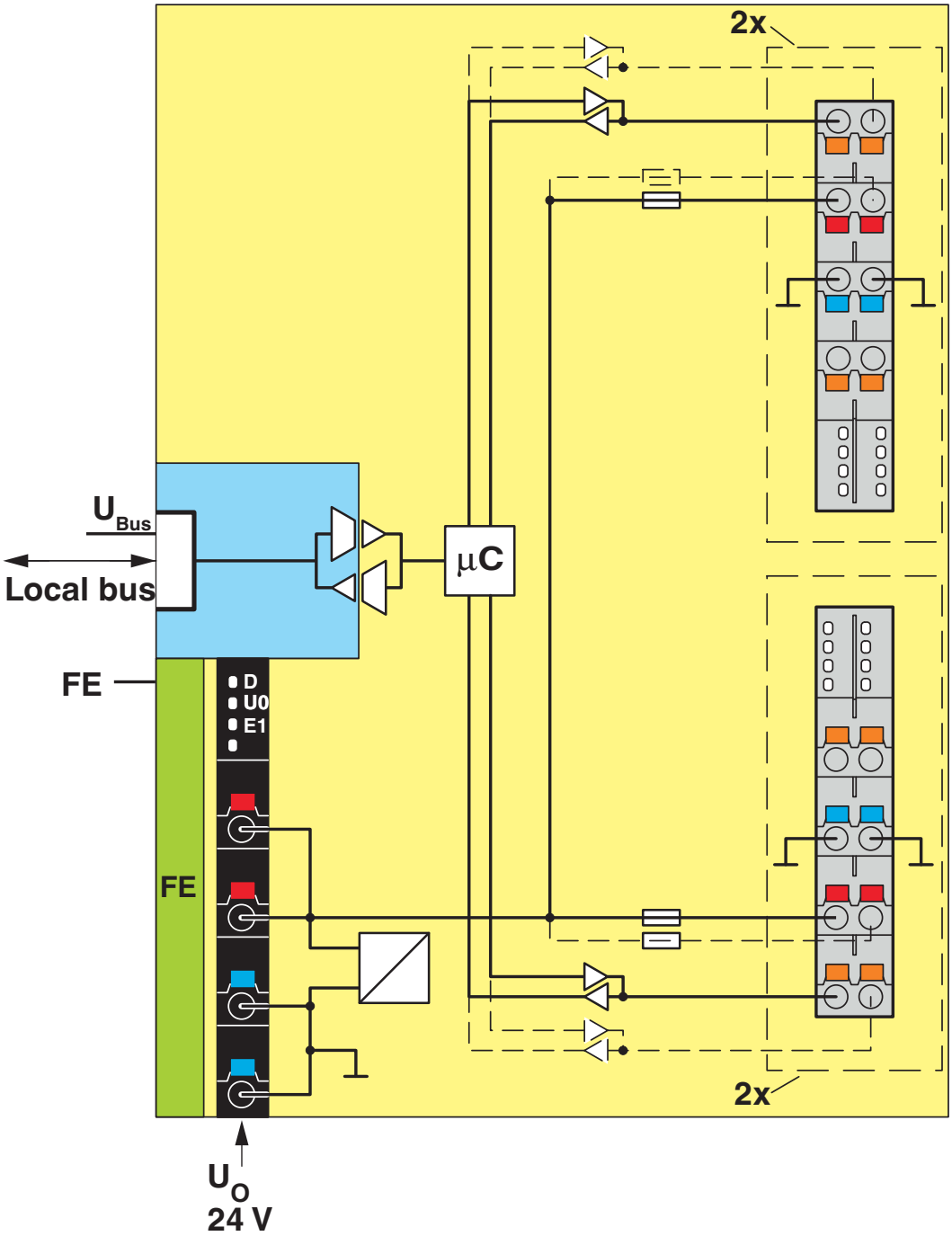

Internal wiring of the terminal points

Approvals

To download certificates, visit the product detail page: https://www.phoenixcontact.com/gb/products/1027843

cULus Listed
Approval ID: E238705

Classifications

ECLASS

ECLASS-13.0	27242608
ECLASS-15.0	27242608

ETIM

ETIM 10.0	EC001604

UNSPSC

UNSPSC 21.0	32151600

Environmental product compliance

EU RoHS

Fulfills EU RoHS substance requirements	Yes
Exemption	7(a), 7(c)-I

China RoHS

Environment friendly use period (EFUP)	EFUP-50
	An article-related China RoHS declaration table can be found in the download area for the respective article under "Manufacturer declaration". For all articles with EFUP-E, no China RoHS declaration table issued and required.

EU REACH SVHC

REACH candidate substance (CAS No.)	Lead(CAS: 7439-92-1)
	6,6'-di-tert-butyl-2,2'-methylenedi-p-cresol(CAS: 119-47-1)
SCIP	cfa3d82c-783c-487e-ac47-4dfc884df865

Phoenix Contact 2026 © - all rights reserved
https://www.phoenixcontact.com

PHOENIX CONTACT Ltd
Halesfield 13, Telford
Shropshire, TF7 4PG
01952 681700
info@phoenixcontact.co.uk