TMC 7 B1 TERM - Terminal adapter

1022233

https://www.phoenixcontact.com/gb/products/1022233

Please be informed that the data shown in this PDF document is generated from our online catalog. Please find the complete data in the user documentation. Our general terms of use for downloads are valid.



Feeder terminal adapter for TMC 71 circuit breakers, single-phase bus bars. Rated for 1000 V AC/DC, 115 A. Wire range 10…1/0 AWG. UL 508 Listed for connection to UL 1077 rated circuit breakers.

Product description

Feed-in terminal adapter for TMC 7 single-pos. bus bars

Commercial data

Item number	1022233
Packing unit	1 pc
Minimum order quantity	1 pc
Sales key	CLA126
Product key	CLA126
GTIN	4055626516004
Weight per piece (including packing)	26.34 g
Weight per piece (excluding packing)	26 g
Customs tariff number	85369010
Country of origin	US

Technical data

Product properties

Product type	Circuit breakers
Type	Adapter

Electrical properties

Number of phases	1
Rated voltage (III/3)	1000 V AC/DC

Connection data

Tightening torque, min	5.65 Nm

Dimensions

Dimensional drawing	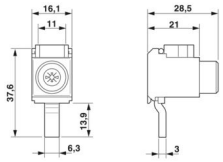
Width	16.1 mm
Height	28.5 mm

Material specifications

Color	light gray (RAL 7035)

Drawings

Dimensional drawing

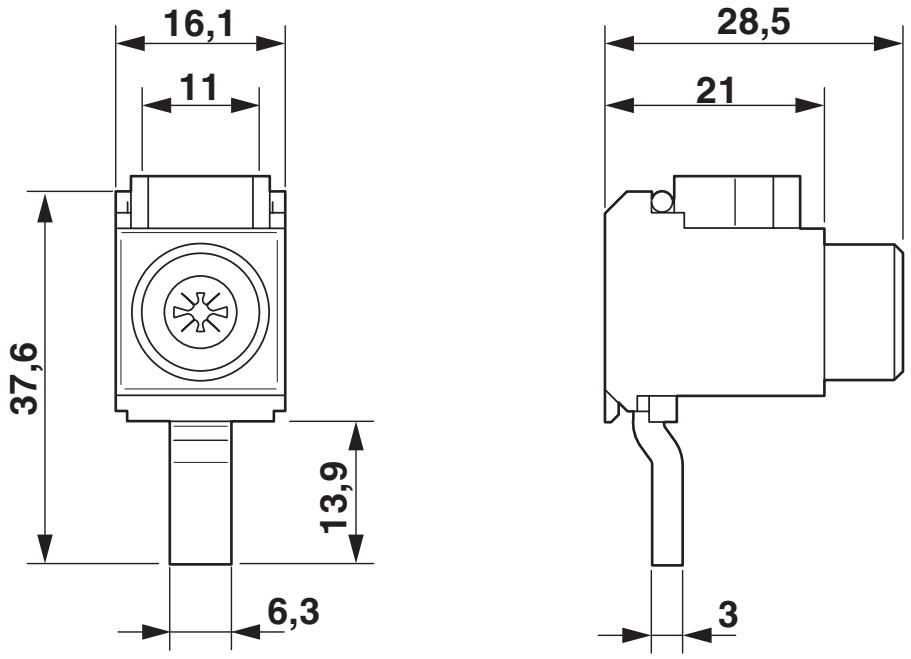

Approvals

To download certificates, visit the product detail page: https://www.phoenixcontact.com/gb/products/1022233

UL Listed
Approval ID: E123528

cUL Listed
Approval ID: E123528

Classifications

ECLASS

ECLASS-13.0	27140492
ECLASS-15.0	27140492

ETIM

ETIM 10.0	EC002936

UNSPSC

UNSPSC 21.0	39121400

Environmental product compliance

EU RoHS

Fulfills EU RoHS substance requirements	Yes, No exemptions

China RoHS

Environment friendly use period (EFUP)	EFUP-E
	No hazardous substances above the limits

EU REACH SVHC

REACH candidate substance (CAS No.)	No substance above 0.1 wt%

EF3.1 Climate Change

CO2e kg	0.61 kg CO2e

Phoenix Contact 2026 © - all rights reserved
https://www.phoenixcontact.com

PHOENIX CONTACT Ltd
Halesfield 13, Telford
Shropshire, TF7 4PG
01952 681700
info@phoenixcontact.co.uk