AXL F PWM2 1H - Function module

1007352

https://www.phoenixcontact.com/gb/products/1007352

Please be informed that the data shown in this PDF document is generated from our online catalog. Please find the complete data in the user documentation. Our general terms of use for downloads are valid.

CRA-READY



Axioline F, Function module, Pulse width modulation; Pulse width modulation; transmission speed in the local bus: 100 Mbps; degree of protection: IP20; Scope of supply: including bus base module and Axioline F connectors; The product is being prepared for compliance with the Cyber Resilience Act (CRA).

Product description

The module is designed for use within an Axioline F station. Two channels that operate independently of one another offer the option of pulse width modulation (PWM) for the output signals. The module supports PWM, pulse generator, and push-pull output operating modes.

Your advantages

- 2 independent channels
- Output of 5 V or 24 V signals
- Push-pull output
- Nominal current per output: 500 mA (at 24 V DC), 10 mA (at 5 V DC)
- Frequency output (0 Hz ... 65535 Hz)
- Frequency resolution can be configured using the divider (1 Hz, 0.1 Hz, 0.01 Hz)
- Pulse width resolution can be configured using the divider (1 ms, 0.1 ms, 0.01 ms)
- Configurable pulse duty factor (0 % ... 100 %)
- Device rating plate stored

ELEKTROGERÄTE RÜCKNAHME

Commercial data

Item number	1007352
Packing unit	1 pc
Minimum order quantity	1 pc
Sales key	DRI264
Product key	DRI264
GTIN	4055626478869
Weight per piece (including packing)	160.4 g
Weight per piece (excluding packing)	160.4 g
Customs tariff number	85389091
Country of origin	DE

Technical data

Dimensions

Dimensional drawing	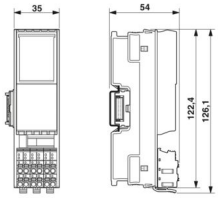
Width	35 mm
Height	126.1 mm
Depth	54 mm
Note on dimensions	The depth applies when a TH 35-7.5 DIN rail is used (in accordance with EN 60715).

Notes

Note on application	Only for industrial use
Note on application	As things stand now, we are preparing the product so that, as of December 11, 2027, it will comply with the requirements of the EU Cyber Resilience Act (CRA) based on the information currently available regarding the CRA.

Mounting

Mounting type	DIN rail mounting
Mounting position	any (no temperature derating)

Material specifications

Color (Housing)	gray (RAL 7042)

Interfaces

Axioline F local bus

Number of interfaces	2
Connection method	Bus base module
Transmission speed	100 Mbps

System properties

Programming data

Input address area	0 Byte
Output address area	8 Byte

Fieldbus data telegram (PROFIBUS)

Required parameter data	1 Byte
Required configuration data	6 Byte

Output data

Signal

Output name	PWM outputs
Operating mode	PWM, pulse generator, push-pull output
Connection method	Push-in connection
Connection technology	2-conductor
Number of outputs	2
Frequency range	0 Hz ... 65535 Hz
Pulse duty factor	0 % ... 100 %
Nominal output voltage	24 V (U_O - 1.1 V)
	5 V DC
Nominal current I_N	max. 500 mA (at 24 V DC)
	max. 10 mA (at 5 V DC)
Nominal load, ohmic	max. 12 W (at 24 V DC nominal voltage)
	max. 50 mW (at 5 V DC nominal voltage)
Nominal load, inductive	max. 12 VA (at 24 V DC nominal voltage)
	max. 50 mVA (at 5 V DC nominal voltage)
Nominal load, lamp	max. 6 W (at nominal voltage)
Short-circuit-proof	yes
Short-circuit current	typ. 2.2 A (for approx. 1.2 µs, auto-retry after approx. 40 µs, 24 V output)
	typ. 24 mA (5 V output)
Transient surge protection	yes

Product properties

Product type	I/O component
Product family	Axioline F
Type	block modular
Mounting position	any (no temperature derating)
Scope of supply	including bus base module and Axioline F connectors
Special properties	The product is being prepared for compliance with the Cyber Resilience Act (CRA)
	Pulse width modulation

Insulation characteristics

Overvoltage category	II (IEC 60664-1, EN 60664-1)
Pollution degree	2 (IEC 60664-1, EN 60664-1)

Electrical properties

Maximum power dissipation for nominal condition	2.05 W

Potentials: Axioline F local bus supply (U_{Bus})

Supply voltage	5 V DC (via bus base module)
Current draw	max. 150 mA

Potentials: Supply voltage input U_O

Supply voltage	24 V DC
Supply voltage range	19.2 V DC ... 30 V DC including all tolerances, including ripple
Current draw	max. 1.1 A
Current consumption	typ. 30 mA (internal current consumption)
Protective circuit	Surge protection; electronic (35 V, 0.5 s)
	Reverse polarity protection; parallel diode; with external 1 A fuse (for start-up only)

Electrical isolation/isolation of the voltage ranges

Test voltage: 5 V supply of the local bus (U_{Bus}) / 24 V supply (I/Os)	500 V AC, 50 Hz, 1 min
Test voltage: 5 V supply of the local bus (U_{Bus}) / functional ground	500 V AC, 50 Hz, 1 min
Test voltage: 24 V supply (I/O) / functional ground	500 V AC, 50 Hz, 1 min

Connection data

Connection technology

Connection name	Axioline F connector
Note on the connection method	Please observe the information provided on conductor cross-sections in the “Axioline F: system and installation” user manual.

Axioline F connector

Connection method	Push-in connection
Note on the connection method	Please observe the information provided on conductor cross-sections in the “Axioline F: system and installation” user manual.
Conductor cross-section, rigid	0.2 mm² ... 1.5 mm²
Conductor cross-section, flexible	0.2 mm² ... 1.5 mm²
Conductor cross-section AWG	24 ... 16
Stripping length	8 mm

Environmental and real-life conditions

Ambient conditions

Ambient temperature (operation)	-25 °C ... 60 °C
Degree of protection	IP20
Air pressure (operation)	70 kPa ... 106 kPa (up to 3000 m above sea level)
Air pressure (storage/transport)	70 kPa ... 106 kPa (up to 3000 m above sea level)
Ambient temperature (storage/transport)	-40 °C ... 85 °C
Permissible humidity (operation)	5 % ... 95 % (non-condensing)
Permissible humidity (storage/transport)	5 % ... 95 % (non-condensing)

Mechanical test

Vibration resistance in accordance with EN 60068-2-6/IEC 60068-2-6	5g
Shock in accordance with EN 60068-2-27/IEC 60068-2-27	30g

Continuous shock in accordance with EN 60068-2-27/IEC 60068-2-27	10g

Standards and regulations

Protection class	III (IEC 61140, EN 61140, VDE 0140-1)

Drawings

Dimensional drawing

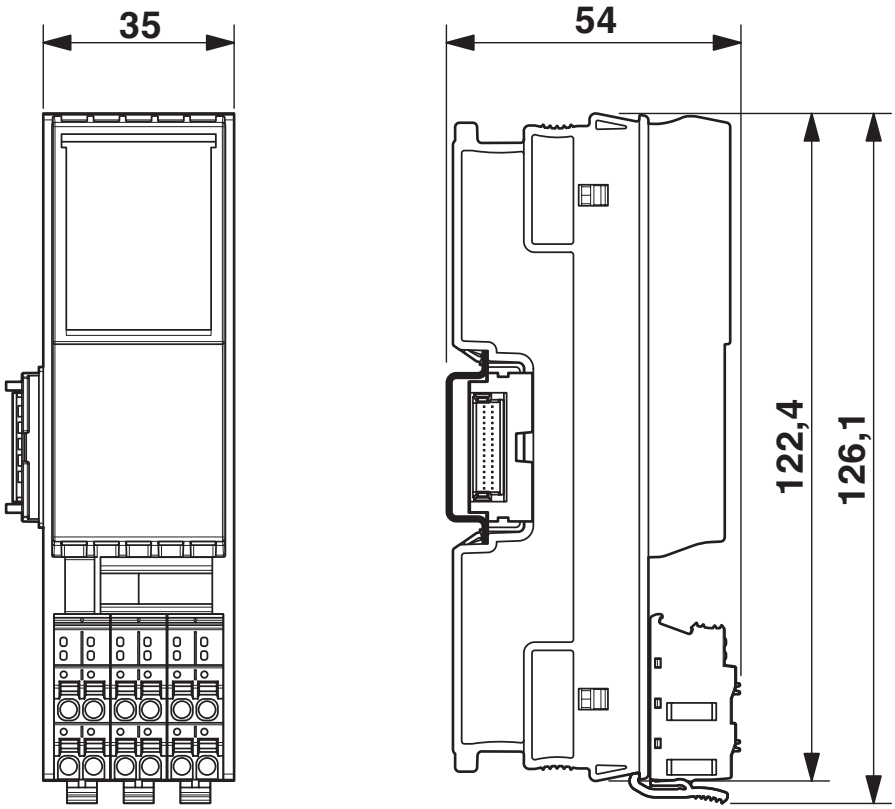

Dimensions (in mm)

Connection diagram

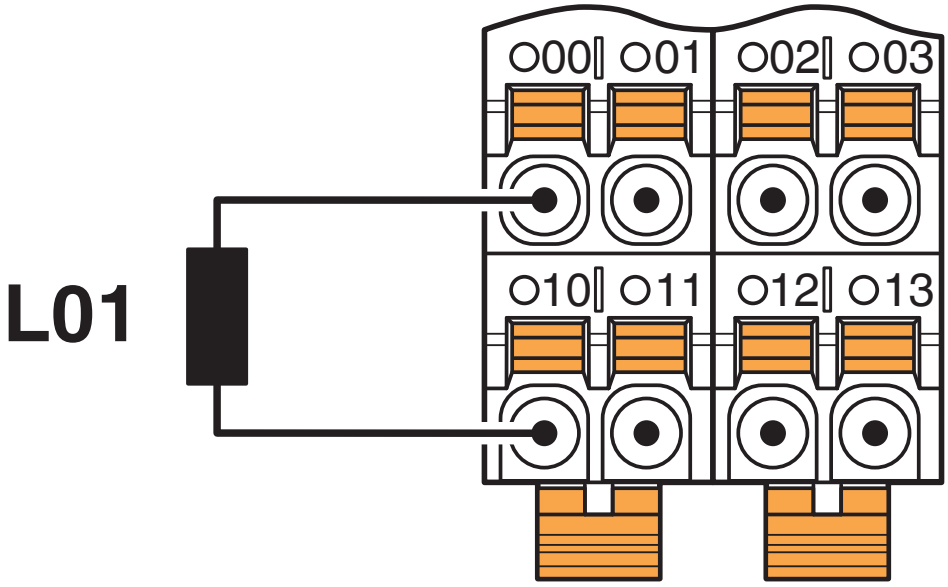

Connection example

Block diagram

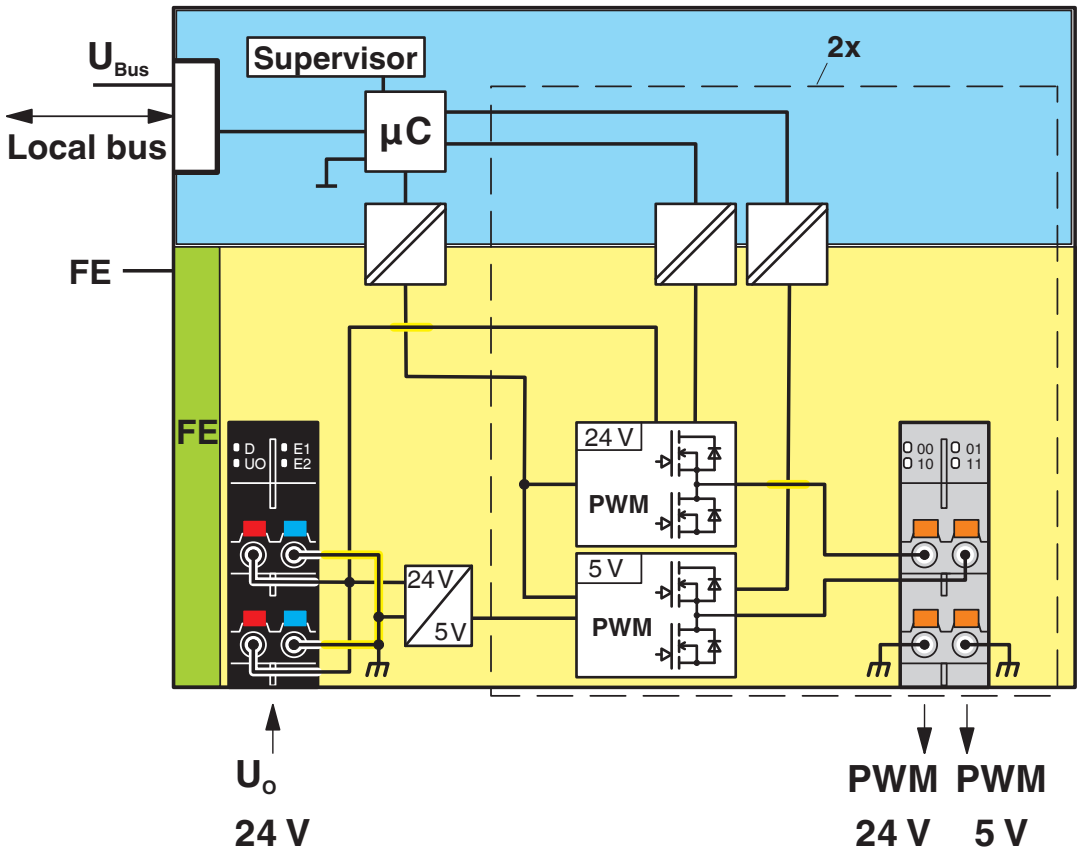

Internal wiring of the terminal points

Approvals

To download certificates, visit the product detail page: https://www.phoenixcontact.com/gb/products/1007352

cULus Listed
Approval ID: E238705

Classifications

ECLASS

ECLASS-13.0	27242605
ECLASS-15.0	27242605

ETIM

ETIM 10.0	EC001601

UNSPSC

UNSPSC 21.0	32151600

Environmental product compliance

EU RoHS

Fulfills EU RoHS substance requirements	Yes
Exemption	7(a), 7(c)-I

China RoHS

Environment friendly use period (EFUP)	EFUP-50
	An article-related China RoHS declaration table can be found in the download area for the respective article under "Manufacturer declaration". For all articles with EFUP-E, no China RoHS declaration table issued and required.

EU REACH SVHC

REACH candidate substance (CAS No.)	Lead(CAS: 7439-92-1)
	6,6'-di-tert-butyl-2,2'-methylenedi-p-cresol(CAS: 119-47-1)
	2,2',6,6'-tetrabromo-4,4'-isopropylidenediphenol(CAS: 79-94-7)
SCIP	c74a2822-23bf-4b46-9ea0-426df5a39fa5

Phoenix Contact 2026 © - all rights reserved
https://www.phoenixcontact.com

PHOENIX CONTACT Ltd
Halesfield 13, Telford
Shropshire, TF7 4PG
01952 681700
info@phoenixcontact.co.uk