AXL F DO32/1 2H - Digital module

1004925

https://www.phoenixcontact.com/gb/products/1004925

Please be informed that the data shown in this PDF document is generated from our online catalog. Please find the complete data in the user documentation. Our general terms of use for downloads are valid.

CRA-READY



Axioline F, Digital output module, Digital outputs: 32, 24 V DC, 500 mA, connection technology: 1-conductor, transmission speed in the local bus: 100 Mbps, degree of protection: IP20, including bus base module and Axioline F connectors; The product is being prepared for compliance with the Cyber Resilience Act (CRA).

Product description

The module is designed for use within an Axioline F station. It is used to output digital signals. The outputs are protected against short circuit and overload.

Your advantages

- 32 digital outputs
- 24 V DC, 500 mA
- Connection of actuators in 1-conductor technology
- Single-channel diagnostics
- Minimum update time of < 100 µs
- Device rating plate stored

ELEKTROGERÄTE RÜCKNAHME

Commercial data

Item number	1004925

Packing unit	1 pc
Minimum order quantity	1 pc
Sales key	DRI232
Product key	DRI232
GTIN	4055626474700
Weight per piece (including packing)	204.3 g
Weight per piece (excluding packing)	159 g
Customs tariff number	85389091
Country of origin	DE

Technical data

Dimensions

Dimensional drawing	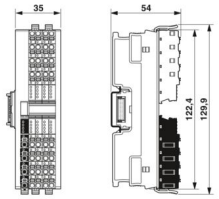
Width	35 mm
Height	129.9 mm
Depth	54 mm
Note on dimensions	The depth applies when a TH 35-7.5 DIN rail is used (in accordance with EN 60715).

Notes

Note on application	Only for industrial use
Note on application	As things stand now, we are preparing the product so that, as of December 11, 2027, it will comply with the requirements of the EU Cyber Resilience Act (CRA) based on the information currently available regarding the CRA.

Mounting

Mounting type	DIN rail mounting
Mounting position	any (no temperature derating)

Material specifications

Color (Housing)	gray (RAL 7042)

Interfaces

Axioline F local bus

Number of interfaces	2
Connection method	Bus base module
Transmission speed	100 Mbps

System properties

Programming data

Input address area	0 Byte
Output address area	4 Byte

Fieldbus data telegram (PROFIBUS)

Required parameter data	3 Byte
Required configuration data	6 Byte

Output data

Digital:

Output name	Digital outputs
Design of digital output	Semiconductor
Connection method	Push-in connection
Connection technology	1-conductor
Number of outputs	32
Protective circuit	Short-circuit protection, overload protection of the outputs; electronic
Output voltage	24 V DC
Limitation of the voltage induced on circuit interruption	-32.8 V ... -15 V
Max. current carrying capacity per output	max. 500 mA
Maximum output current per module	16 A (provide external protection)
Nominal output voltage	24 V DC
Load min.	10 kΩ
Output voltage when switched off	max. 1 V
Output current when switched off	max. 300 µA
Nominal load, inductive	max. 12 VA (1.2 H, 48 Ω, with nominal voltage)
Nominal load, lamp	max. 12 W (at nominal voltage)
Nominal load, ohmic	max. 12 W (48 Ω, with nominal voltage)
Behavior with overload	Shutdown with automatic restart
Behavior with inductive overload	Output can be destroyed
Switching frequency	max. 5500 per second (with ohmic load)
	max. 1 per second (with inductive load)
	max. 16 per second (with nominal lamp load)
Reverse voltage resistance to short pulses	limited protection up to 0.5 A for 1 s
Signal delay	max. 150 µs (when switched on)
	max. 200 µs (during switching off with ohmic nominal load)
Overcurrent shut-down	as of 0.7 A
Output current with ground connection interrupt when switched off	< 1 mA

Product properties

Product type	I/O component
Product family	Axioline F
Type	block modular
Mounting position	any (no temperature derating)
Scope of supply	including bus base module and Axioline F connectors
Special properties	The product is being prepared for compliance with the Cyber Resilience Act (CRA)

Insulation characteristics

Overvoltage category	II (IEC 60664-1, EN 60664-1)
Pollution degree	2 (IEC 60664-1, EN 60664-1)

Electrical properties

Maximum power dissipation for nominal condition	2.7 W

Potentials: Axioline F local bus supply (U_{Bus})

Supply voltage	5 V DC (via bus base module)
Current draw	max. 60 mA

Potentials: Supply for digital output modules (U_O)

Supply voltage	24 V DC
Supply voltage range	19.2 V DC ... 30 V DC (including all tolerances, including ripple)
Current draw	max. 16 A (Provide external protection; if the total current of 8 A is exceeded, connect the supply at the power connector parallel via both terminal points.)
Current consumption	min. 33 mA (without actuators)
Protective circuit	Surge protection; electronic (35 V, 0.5 s)
	Reverse polarity protection; parallel diode; with external 5 A fuse (only for commissioning)
Protection	max. 16 A (polarity reversal protection up to 5 A)

Electrical isolation/isolation of the voltage ranges

Test voltage: 5 V supply of the local bus (U_{Bus}) / 24 V supply (I/Os)	500 V AC, 50 Hz, 1 min
Test voltage: 5 V supply of the local bus (U_{Bus}) / functional ground	500 V AC, 50 Hz, 1 min
Test voltage: 24 V supply (I/O) / functional ground	500 V AC, 50 Hz, 1 min

Connection data

Connection technology

Connection name	Axioline F connector
Note on the connection method	Please observe the information provided on conductor cross-sections in the “Axioline F: system and installation” user manual.
	With a small conductor cross-section and high current, the terminal point temperature can reach up to 31 K above the ambient temperature.
	When selecting the cables, observe the permissible operating temperature in accordance with IEC or UL.

Axioline F connector

Connection method	Push-in connection
Note on the connection method	Please observe the information provided on conductor cross-sections in the “Axioline F: system and installation” user manual.
	With a small conductor cross-section and high current, the terminal point temperature can reach up to 31 K above the ambient temperature.
	When selecting the cables, observe the permissible operating temperature in accordance with IEC or UL.
Conductor cross-section, rigid	0.2 mm² ... 1.5 mm²
Conductor cross-section, flexible	0.2 mm² ... 1.5 mm²

Conductor cross-section AWG	24 ... 16
Stripping length	8 mm

Environmental and real-life conditions

Ambient conditions

Ambient temperature (operation)	-25 °C ... 60 °C
Degree of protection	IP20
Air pressure (operation)	70 kPa ... 106 kPa (up to 3000 m above sea level)
Air pressure (storage/transport)	70 kPa ... 106 kPa (up to 3000 m above sea level)
Ambient temperature (storage/transport)	-40 °C ... 85 °C
Permissible humidity (operation)	5 % ... 95 % (non-condensing)
Permissible humidity (storage/transport)	5 % ... 95 % (non-condensing)

Mechanical test

Vibration resistance in accordance with EN 60068-2-6/IEC 60068-2-6	5g
Shock in accordance with EN 60068-2-27/IEC 60068-2-27	30g
Continuous shock in accordance with EN 60068-2-27/IEC 60068-2-27	10g

Standards and regulations

Protection class	III (IEC 61140, EN 61140, VDE 0140-1)

Drawings

Dimensional drawing

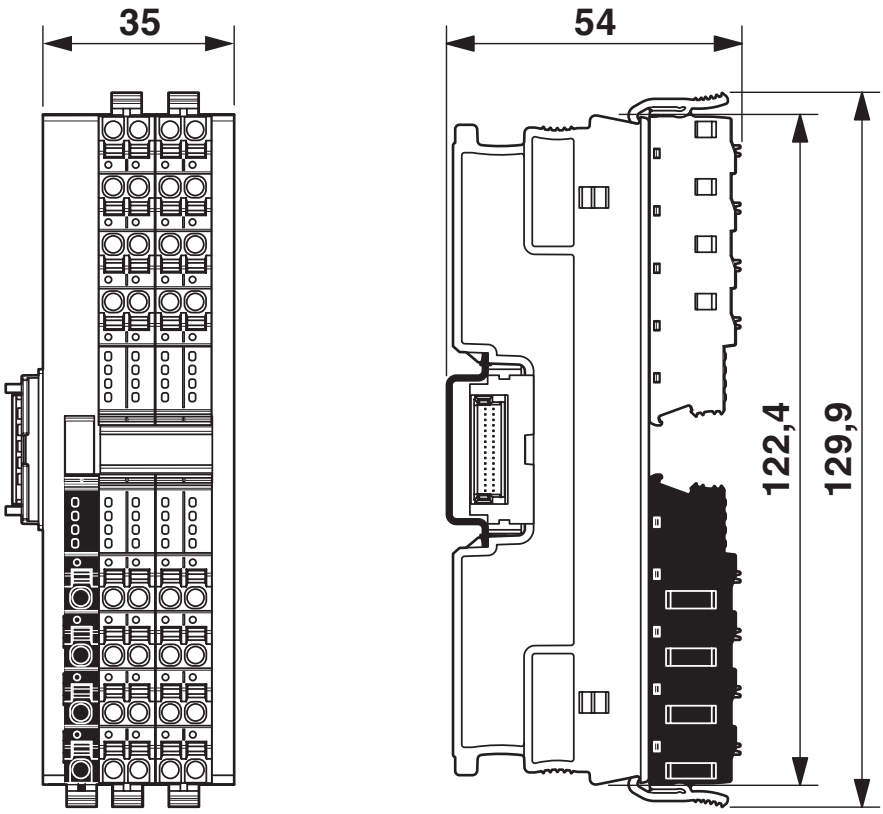

Dimensions

Connection diagram

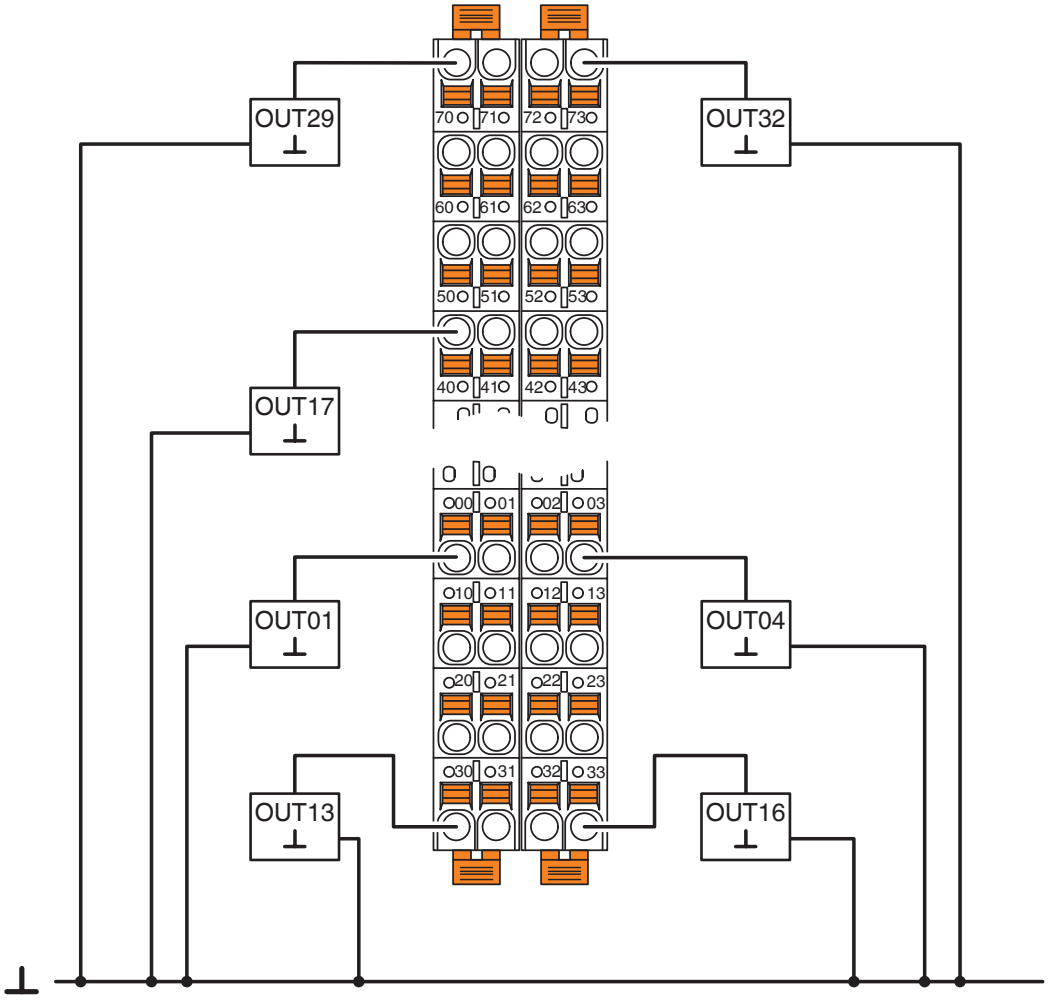

Connection in 1-conductor technology

Connection diagram

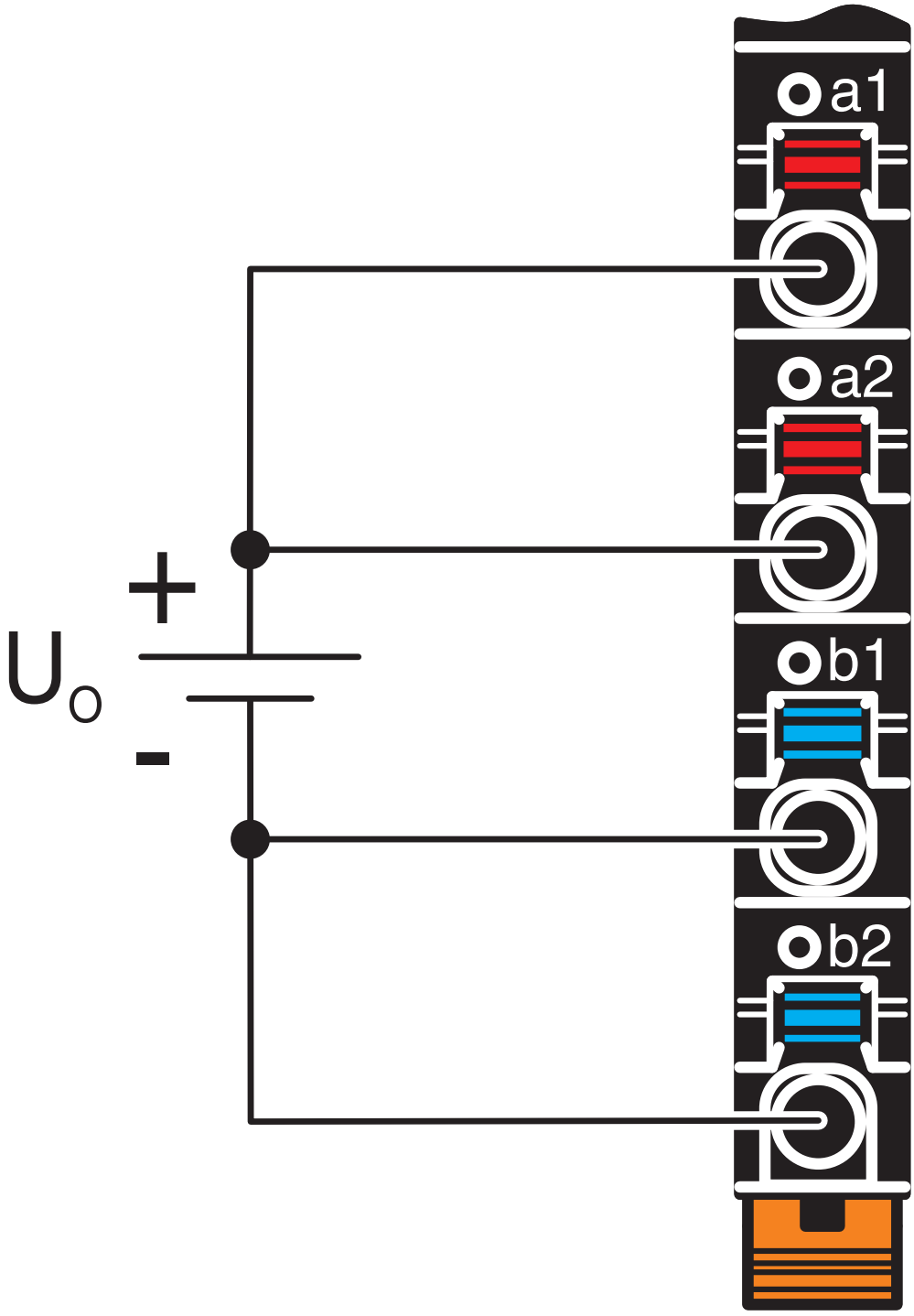

Parallel supply of the supply voltage

Diagram

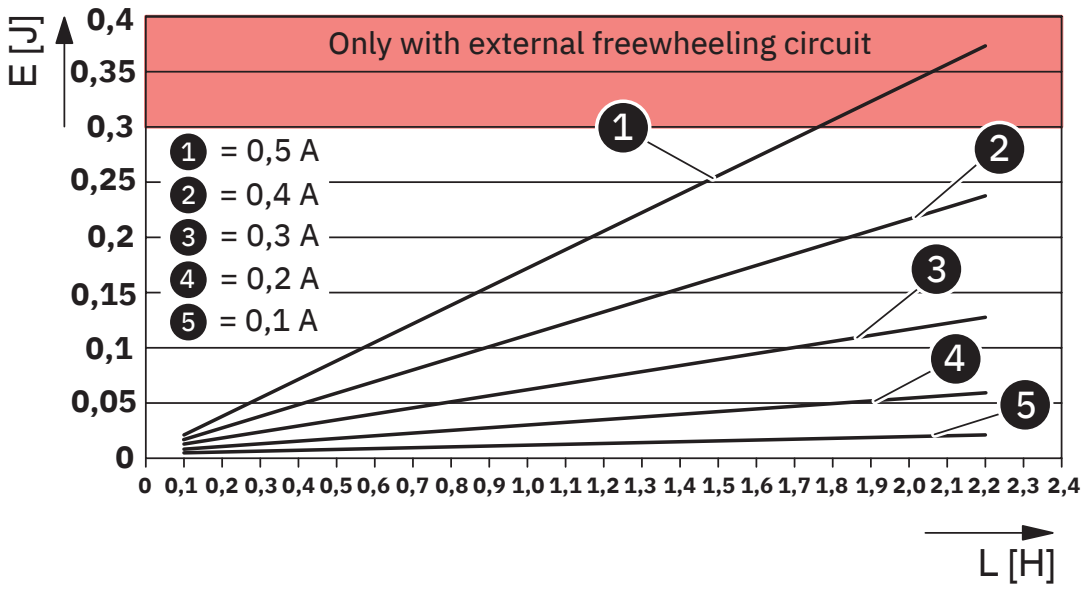

Maximum outputs power consumption when inductive loads are switched off

Block diagram

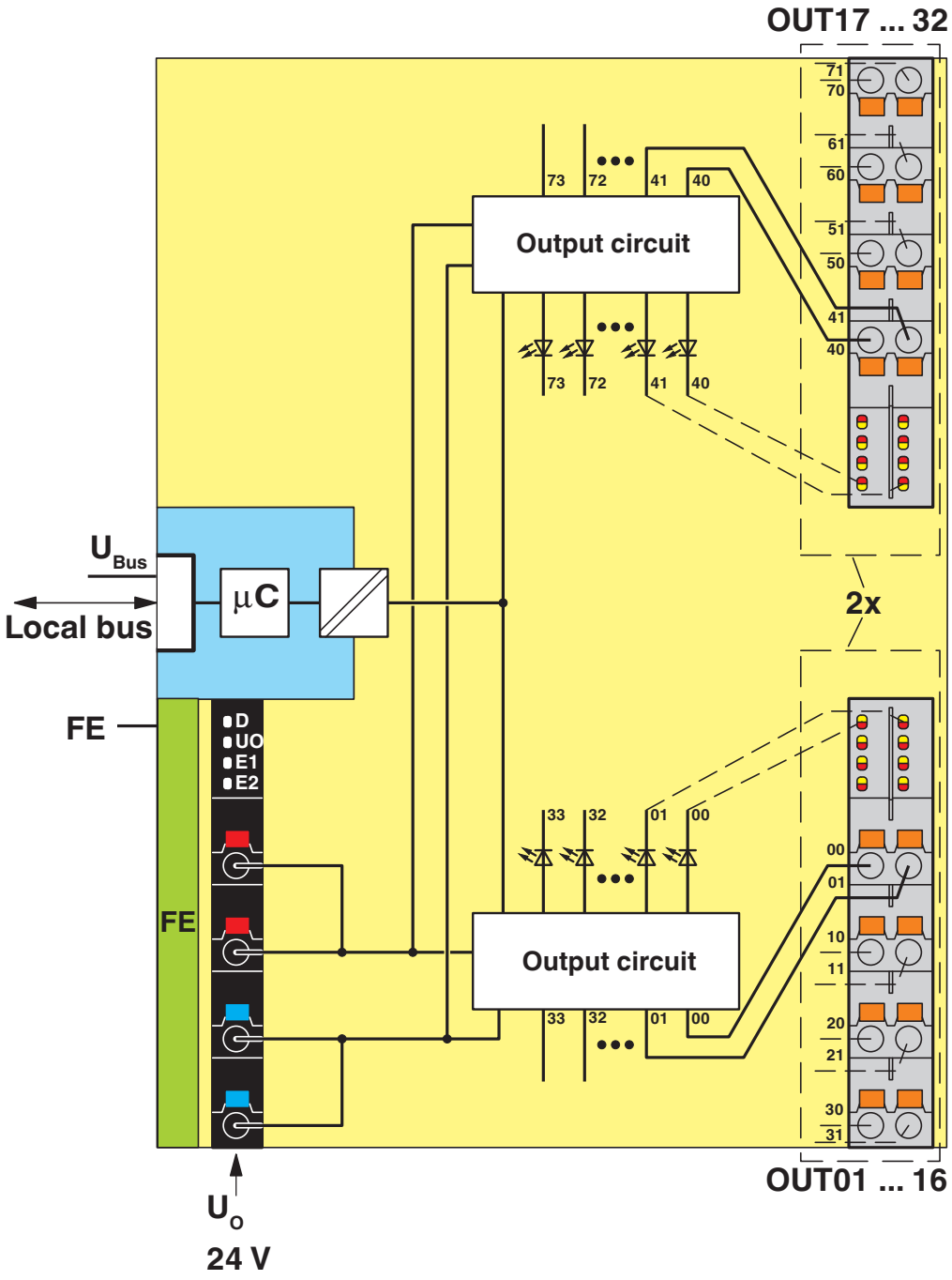

Internal wiring of the terminal points

Approvals

To download certificates, visit the product detail page: https://www.phoenixcontact.com/gb/products/1004925

DNV GL
Approval ID: TAA00000DF

LR
Approval ID: LR2480202TA-02

BSH
Approval ID: 840c

RINA
Approval ID: ELE008423XG001

ABS
Approval ID: 23-2449604-PDA

cULus Listed
Approval ID: E238705

Classifications

ECLASS

ECLASS-13.0	27242604
ECLASS-15.0	27242604

ETIM

ETIM 10.0	EC001599

UNSPSC

UNSPSC 21.0	32151600

Environmental product compliance

EU RoHS

Fulfills EU RoHS substance requirements	Yes
Exemption	7(a), 7(c)-I

China RoHS

Environment friendly use period (EFUP)	EFUP-50
	An article-related China RoHS declaration table can be found in the download area for the respective article under "Manufacturer declaration". For all articles with EFUP-E, no China RoHS declaration table issued and required.

EU REACH SVHC

REACH candidate substance (CAS No.)	Lead(CAS: 7439-92-1)
SCIP	4d5f9e23-163f-4f80-aefe-8bbd26e949b2

Phoenix Contact 2026 © - all rights reserved
https://www.phoenixcontact.com

PHOENIX CONTACT Ltd
Halesfield 13, Telford
Shropshire, TF7 4PG
01952 681700
info@phoenixcontact.co.uk