# EC-E  0,5A DC24V - Electronic circuit breaker

0903041

https://www.phoenixcontact.com/gb/products/0903041

Please be informed that the data shown in this PDF document is generated from our online catalog. Please find the complete data in the user documentation. Our general terms of use for downloads are valid.



Electronic circuit breaker, 1 reset input, nominal current: 0.5 A

## Your advantages

- Error-free short-circuit detection even across long cable paths with the electronics characteristic curve
- Active current limitation to improve the capacity of the upstream power supply
- Increased system transparency with integrated status output
- Remote reconnection with the reset function

ELEKTROGERÄTE RÜCKNAHME

## Commercial data

| | |
|---|---|
| Item number | 0903041 |
| Packing unit | 6 pc |
| Minimum order quantity | 6 pc |
| Sales key | CLA131 |
| Product key | CLA131 |
| GTIN | 4046356466875 |
| Weight per piece (including packing) | 67.566 g |
| Weight per piece (excluding packing) | 67.566 g |
| Customs tariff number | 85362010 |
| Country of origin | DE |

# Technical data

## Notes

| | |
|---|---|
| General | When mounted in rows without convection cooling, the nominal device current should only be led to a maximum of 80% due to the thermal effect during continuous operation (100% operating factor).<br>Special precautionary measures must be taken in systems or machines, to prevent components from restarting (e.g., use of a safety PLC).<br>Parallel connection of multiple circuit breakers is not permitted. |

## Product properties

| | |
|---|---|
| Product type | Device circuit breakers |
| Product family | EC-E |
| Type | DIN rail module, one-piece |
| Number of positions | 1 |
| No. of channels | 1 |

### Insulation characteristics

| | |
|---|---|
| Degree of pollution | 2 |

## Electrical properties

| | |
|---|---|
| Fuse type | Automatic device |
| Maximum power dissipation for nominal condition | ≤ 0.76 VA |
| Switching capacity $I_{CN}$ | Active current limitation |
| Fuse | electronic |

### General

| | |
|---|---|
| Operating voltage | 24 V DC |
| | 18 V DC ... 32 V DC |
| Nominal current $I_N$ | 0.5 A |
| Rated surge voltage | 0.5 kV |
| Tripping method | E (electronic) |
| Required backup fuse | not required, integrated failsafe element |
| Dielectric strength | max. 32 V DC (Load circuit) |
| Switch off | typ. 1.8 x $I_N$ |
| Active current limitation | active |
| Fuse | electronic |
| Closed-circuit current range I0 | typ. 25 mA ±5 mA (When switched on) |
| MTBF (IEC 61709, SN 29500) | 7430000 h (at 25 °C with 80 % load) |
| | 6590000 h (at 40 °C with 80 % load) |
| Voltage drop | 70 mV (at $I_N$) |
| Contact switching type | without electrical isolation |

### Load circuit

| | |
|---|---|
| Max. capacitive load | 20000 µF |

| | |
|---|---|
| Switch-on delay | typ. 0.5 s |

Reset

| | |
|---|---|
| Input voltage | max. 32 V DC |
| Current consumption | typ. 2.6 mA (at 24 V DC) |
| Pulse length | min. 10 ms |
| Voltage | < 3 V DC (Low state) |
| | > 8 V DC (High state) |

Status output

| | |
|---|---|
| Output voltage | 24 V DC |
| Output current | max. 0.2 A (Short-circuit-proof) |

Indicator/remote signaling

| | |
|---|---|
| Connection name | Auxiliary contact |
| Switching function | Reset input |

## Connection data

| | |
|---|---|
| Nominal cross section | 16.00 mm² |
| Connection method | Screw connection |

Line+ / LOAD+ /0V

| | |
|---|---|
| Connection method | Screw connection |
| Screw thread | M4 |
| Tightening torque | ... 1.2 Nm |
| Stripping length | 10 mm |
| Conductor cross-section rigid | 0.5 mm² ... 16 mm² |
| Cross section AWG | 26 ... 6 (converted acc. to IEC) |
| Conductor cross-section flexible | 0.5 mm² ... 16 mm² |
| Conductor cross-section, flexible [AWG] | 20 ... 6 (converted acc. to IEC) |
| Conductor cross-section flexible (ferrule without plastic sleeve) | 0.5 mm² ... 10 mm² |
| Flexible conductor cross-section (ferrule with plastic sleeve) | 0.5 mm² ... 10 mm² |
| 2 conductors with same cross section, rigid | 0.5 mm² ... 4 mm² |
| 2 conductors with the same cross-section AWG rigid | 20 ... 12 (converted acc. to IEC) |
| 2 conductors with same cross section, flexible | 0.5 mm² ... 4 mm² |
| 2 conductors with the same cross-section AWG flexible | 20 ... 12 (converted acc. to IEC) |
| 2 conductors with same cross section, flexible, with ferrule without plastic sleeve | 0.5 mm² ... 2.5 mm² |
| 2 conductors with the same cross section, flexible, with TWIN ferrule with plastic sleeve | 0.5 mm² ... 6 mm² |
| Nominal cross section | 16 mm² |

Auxiliary contact

| | |
|---|---|
| Connection method | Screw connection |
| Screw thread | M3 |
| Tightening torque | ... 0.5 Nm |
| Stripping length | 8 mm |

| | |
|---|---|
| Conductor cross-section flexible (ferrule without plastic sleeve) | 0.25 mm² ... 2.5 mm² |
| Flexible conductor cross-section (ferrule with plastic sleeve) | 0.25 mm² ... 2.5 mm² |

Line+/LOAD+/0V

| | |
|---|---|
| Connection method | Screw connection |
| Screw thread | M4 |
| Tightening torque | 1.2 Nm |
| Stripping length | 10 mm |
| Conductor cross-section flexible | 0.5 mm² ... 16 mm² |
| Conductor cross-section rigid | 0.5 mm² ... 16 mm² |
| Conductor cross-section AWG | 20 ... 6 |
| 2 conductors with the same cross section, flexible, with TWIN ferrule with plastic sleeve | 0.5 mm² ... 6 mm² |
| Conductor cross-section, flexible, with ferrule, with plastic sleeve | 0.5 mm² ... 10 mm² |
| Conductor cross-section, flexible, with ferrule, without plastic sleeve | 0.5 mm² ... 10 mm² |

Auxiliary contact

| | |
|---|---|
| Connection method | Screw connection |
| Screw thread | M3 |
| Tightening torque | 0.5 Nm |
| Stripping length | 8 mm |
| Conductor cross-section AWG | 24 ... 14 |
| Conductor cross-section, flexible, with ferrule, with plastic sleeve | 0.25 mm² ... 2.5 mm² |
| Conductor cross-section, flexible, with ferrule, without plastic sleeve | 0.25 mm² ... 2.5 mm² |

## Dimensions

| | |
|---|---|
| Width | 12.5 mm |
| Height | 83 mm |
| Height NS 35/15 | 90.5 mm |
| Height NS 35/7,5 | 83 mm |
| Depth | 80 mm |

## Material specifications

| | |
|---|---|
| Color | black (RAL 9005) |
| Flammability rating according to UL 94 | V0 |

## Environmental and real-life conditions

Ambient conditions

| | |
|---|---|
| Degree of protection | IP20 (Housing) |
| Ambient temperature (operation) | 0 °C ... 50 °C (non-condensing) |
| Ambient temperature (storage/transport) | -20 °C ... 70 °C |
| Humidity test | 96 h, 95 % RH, 40 °C |

## Standards and regulations

| | |
|---|---|
| Standards/specifications | UL 508 |
| Standards/specifications | CSA 22.2 |
| Note | No. 14 |
| Standards/specifications | UL 2367 |
| Standards/specifications | CSA 22.2 |
| Note | No. 142 |
| Standards/specifications | CSA 22.2 |
| Note | No. 213 |
| Standards/specifications | UL 1604 |

## Mounting

| | |
|---|---|
| Mounting type | DIN rail: 35 mm |

## Drawings

Diagram

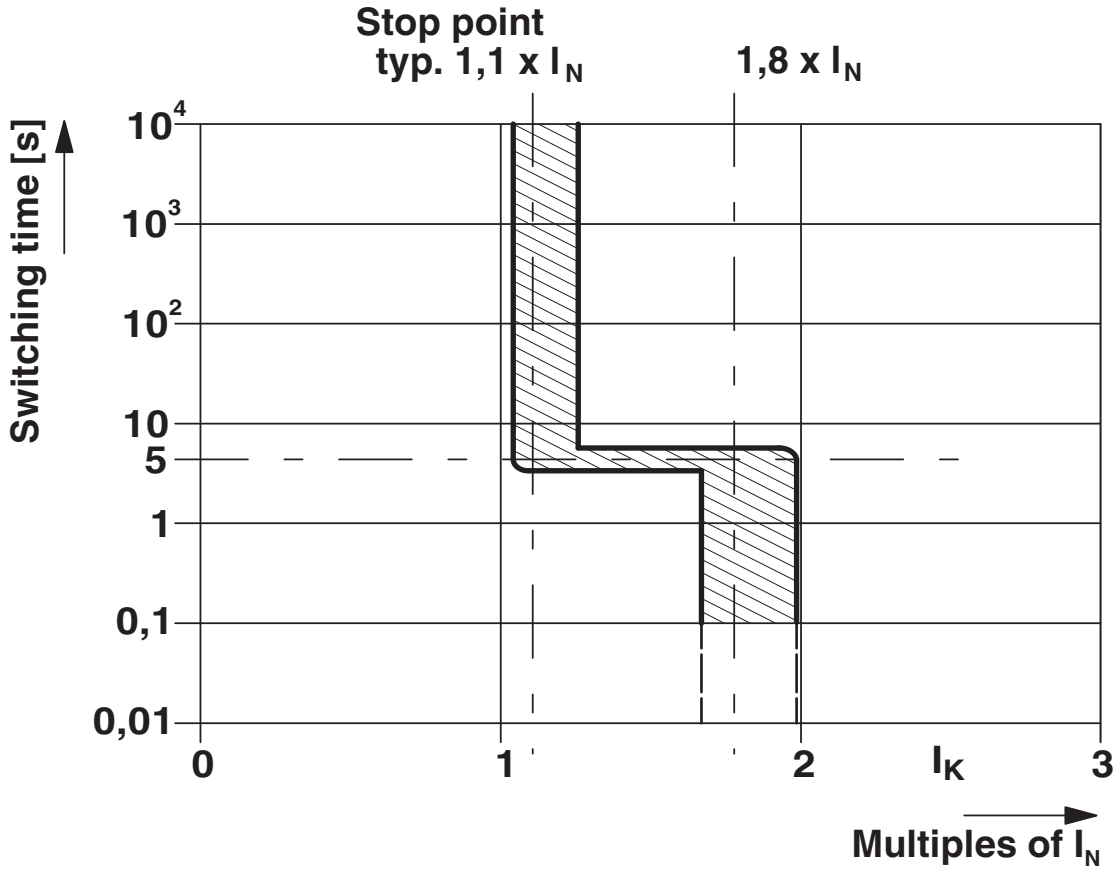


Trigger characteristic

Circuit diagram

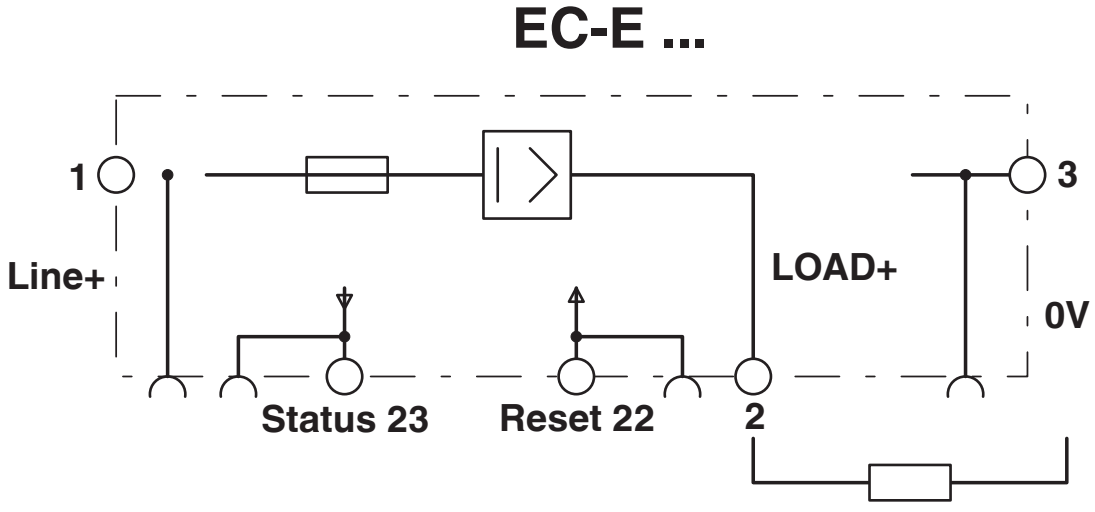

## Approvals

To download certificates, visit the product detail page: https://www.phoenixcontact.com/gb/products/0903041

**UL Recognized**
Approval ID: FILE E 317172

**DNV GL**
Approval ID: TAE00002HC

**cULus Listed**
Approval ID: E123528

**UL Recognized**
Approval ID: FILE E 324415

**CSA**
Approval ID: 2840117

## Classifications

### ECLASS

| | |
|---|---|
| ECLASS-13.0 | 27140401 |
| ECLASS-15.0 | 27140401 |

### ETIM

| | |
|---|---|
| ETIM 10.0 | EC003538 |

### UNSPSC

| | |
|---|---|
| UNSPSC 21.0 | 39121400 |

## Environmental product compliance

EU RoHS

| | |
|---|---|
| Fulfills EU RoHS substance requirements | Yes |
| Exemption | 7(a), 7(c)-I |

China RoHS

| | |
|---|---|
| Environment friendly use period (EFUP) | EFUP-25 |
| | An article-related China RoHS declaration table can be found in the download area for the respective article under "Manufacturer declaration". For all articles with EFUP-E, no China RoHS declaration table issued and required. |

EU REACH SVHC

| | |
|---|---|
| REACH candidate substance (CAS No.) | Lead(CAS: 7439-92-1) |
| SCIP | 92bcc1ed-bc0a-4846-ab13-a49873818f09 |

EF3.1 Climate Change

| | |
|---|---|
| CO2e kg | 4.934 kg CO2e |

Phoenix Contact 2026 © - all rights reserved
https://www.phoenixcontact.com

PHOENIX CONTACT Ltd
Halesfield 13, Telford
Shropshire, TF7 4PG
01952 681700
info@phoenixcontact.co.uk