EC-E1 2A - Electronic circuit breaker

0903024

https://www.phoenixcontact.com/gb/products/0903024

Please be informed that the data shown in this PDF document is generated from our online catalog. Please find the complete data in the user documentation. Our general terms of use for downloads are valid.



Electronic circuit breaker, signal contact: 1 N/O contact, nominal current: 2 A

Your advantages

- Error-free short-circuit detection even across long cable paths with the electronics characteristic curve
- Active current limitation to improve the capacity of the upstream power supply
- Increased system transparency with integrated floating remote indication contact (N/O)

ELEKTROGERÄTE RÜCKNAHME

Commercial data

Item number	0903024
Packing unit	6 pc
Minimum order quantity	6 pc
Sales key	CLA131
Product key	CLA131
GTIN	4046356328005
Weight per piece (including packing)	70.25 g
Weight per piece (excluding packing)	65.7 g
Customs tariff number	85362010
Country of origin	DE

Technical data

Notes

General	When mounted in rows without convection cooling, the nominal device current should only be led to a maximum of 80% due to the thermal effect during continuous operation (100% operating factor). Special precautionary measures must be taken in systems or machines, to prevent components from restarting (e.g., use of a safety PLC). Parallel connection of multiple circuit breakers is not permitted.

Product properties

Product type	Device circuit breakers
Product family	EC-E
Type	DIN rail module, one-piece
Number of positions	1
No. of channels	1

Insulation characteristics

Degree of pollution	2

Electrical properties

Fuse type	Automatic device
Maximum power dissipation for nominal condition	≤ 0.98 VA
Switching capacity I_{CN}	Active current limitation
Fuse	electronic

General

Operating voltage	24 V DC
	18 V DC ... 32 V DC
Nominal current I_N	2 A
Rated surge voltage	0.5 kV
Tripping method	E (electronic)
Required backup fuse	not required, integrated failsafe element
Dielectric strength	max. 32 V DC (Load circuit)
Switch off	typ. 1.8 x I_N
Active current limitation	active
Fuse	electronic
Closed-circuit current range I0	typ. 25 mA ±5 mA (When switched on)
MTBF (IEC 61709, SN 29500)	7430000 h (at 25 °C with 80 % load)
	6590000 h (at 40 °C with 80 % load)
Voltage drop	130 mV (at I_N)
Contact switching type	without electrical isolation

Load circuit

Max. capacitive load	20000 µF

Switch-on delay	typ. 0.5 s

Auxiliary contact

Contact connection type	floating signal contact
Minimum operating voltage U_{min} DC	10 V DC
Maximum operating voltage U_{max} DC	30 V DC
Minimum operating current I_{min}	10 mA
Max. operating current I_{max}	0.5 A

Indicator/remote signaling

Connection name	Auxiliary contact
Switching function	N/O contact

Connection data

Nominal cross section	16.00 mm²

Line+ / LOAD+ /0V

Connection method	Screw connection
Screw thread	M4
Tightening torque	... 1.2 Nm
Stripping length	10 mm
Conductor cross-section rigid	0.5 mm² ... 16 mm²
Cross section AWG	20 ... 6 (converted acc. to IEC)
Conductor cross-section flexible	0.5 mm² ... 16 mm²
Conductor cross-section, flexible [AWG]	20 ... 6 (converted acc. to IEC)
Conductor cross-section flexible (ferrule without plastic sleeve)	0.5 mm² ... 10 mm²
Flexible conductor cross-section (ferrule with plastic sleeve)	0.5 mm² ... 10 mm²
2 conductors with same cross section, rigid	0.5 mm² ... 4 mm²
2 conductors with the same cross-section AWG rigid	20 ... 12 (converted acc. to IEC)
2 conductors with same cross section, flexible	0.5 mm² ... 4 mm²
2 conductors with the same cross-section AWG flexible	20 ... 12 (converted acc. to IEC)
2 conductors with same cross section, flexible, with ferrule without plastic sleeve	0.5 mm² ... 2.5 mm²
2 conductors with the same cross section, flexible, with TWIN ferrule with plastic sleeve	0.5 mm² ... 6 mm²
Nominal cross section	16 mm²

Auxiliary contact

Connection method	Screw connection
Screw thread	M3
Tightening torque	... 0.5 Nm
Stripping length	8 mm
Conductor cross-section flexible (ferrule without plastic sleeve)	0.25 mm² ... 2.5 mm²
Flexible conductor cross-section (ferrule with plastic sleeve)	0.25 mm² ... 2.5 mm²

Line+/LOAD+/0V

Connection method	Screw connection

Screw thread	M4
Tightening torque	1.2 Nm
Stripping length	10 mm
Conductor cross-section flexible	0.5 mm² ... 16 mm²
Conductor cross-section rigid	0.5 mm² ... 16 mm²
Conductor cross-section AWG	20 ... 6
2 conductors with the same cross section, flexible, with TWIN ferrule with plastic sleeve	0.5 mm² ... 6 mm²
Conductor cross-section, flexible, with ferrule, with plastic sleeve	0.5 mm² ... 10 mm²
Conductor cross-section, flexible, with ferrule, without plastic sleeve	0.5 mm² ... 10 mm²

Auxiliary contact

Connection method	Screw connection
Screw thread	M3
Tightening torque	0.5 Nm
Stripping length	8 mm
Conductor cross-section AWG	24 ... 14
Conductor cross-section, flexible, with ferrule, with plastic sleeve	0.25 mm² ... 2.5 mm²
Conductor cross-section, flexible, with ferrule, without plastic sleeve	0.25 mm² ... 2.5 mm²

Dimensions

Width	12.5 mm
Height	83 mm
Height NS 35/15	90.5 mm
Height NS 35/7,5	83 mm
Depth	80 mm

Material specifications

Color	black (RAL 9005)
Flammability rating according to UL 94	V0

Environmental and real-life conditions

Ambient conditions

Degree of protection	IP20 (Housing)
Ambient temperature (operation)	0 °C ... 50 °C (non-condensing)
Ambient temperature (storage/transport)	-20 °C ... 70 °C
Humidity test	96 h, 95 % RH, 40 °C

Standards and regulations

Standards/specifications	UL 508
Standards/specifications	CSA 22.2
Note	No. 14
Standards/specifications	UL 2367

Standards/specifications	CSA 22.2
Note	No. 142
Standards/specifications	CSA 22.2
Note	No. 213
Standards/specifications	UL 1604

Mounting

Mounting type	DIN rail: 35 mm

Drawings

Circuit diagram

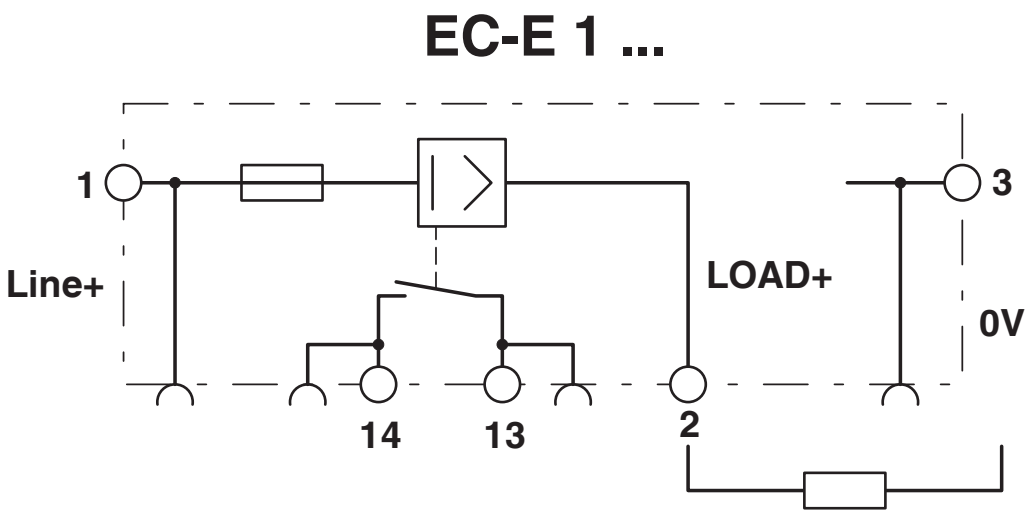

Approvals

To download certificates, visit the product detail page: https://www.phoenixcontact.com/gb/products/0903024

UL Recognized
Approval ID: FILE E 317172

DNV GL
Approval ID: TAE00002HC

cULus Listed
Approval ID: E123528

UL Recognized
Approval ID: FILE E 324415

CSA
Approval ID: 2840117

Classifications

ECLASS

ECLASS-13.0	27140401
ECLASS-15.0	27140401

ETIM

ETIM 10.0	EC003538

UNSPSC

UNSPSC 21.0	39121400

Environmental product compliance

EU RoHS

Fulfills EU RoHS substance requirements	Yes
Exemption	6(c), 7(a), 7(c)-I

China RoHS

Environment friendly use period (EFUP)	EFUP-25
	An article-related China RoHS declaration table can be found in the download area for the respective article under "Manufacturer declaration". For all articles with EFUP-E, no China RoHS declaration table issued and required.

EU REACH SVHC

REACH candidate substance (CAS No.)	Lead(CAS: 7439-92-1)
SCIP	d1de4ae9-b6e8-4c7d-8ed3-d2699defc32d

EF3.1 Climate Change

CO2e kg	4.497 kg CO2e

Phoenix Contact 2026 © - all rights reserved
https://www.phoenixcontact.com

PHOENIX CONTACT Ltd
Halesfield 13, Telford
Shropshire, TF7 4PG
01952 681700
info@phoenixcontact.co.uk