NS 35/15 WH PERF 2000MM - DIN rail perforated

0806602

https://www.phoenixcontact.com/gb/products/0806602

Please be informed that the data shown in this PDF document is generated from our online catalog. Please find the complete data in the user documentation. Our general terms of use for downloads are valid.



DIN rail perforated, Pack of 25 (50 m), similar to EN 60715, material: Steel, galvanized, white passivated, Standard profile, color: white

Commercial data

Item number	0806602
Packing unit	25 pc
Minimum order quantity	25 pc
Sales key	BE7243
Product key	BE7243
GTIN	4017918167424
Weight per piece (including packing)	1,290 g
Weight per piece (excluding packing)	1,290 g
Customs tariff number	72166190
Country of origin	DE

Technical data

Product properties

Product type	DIN rail

Dimensions

Dimensional drawing	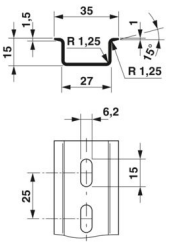
Width	35 mm
Hole width	15 mm
Hole height	6.2 mm
Depth	15 mm
Length	2000 mm
Drill hole spacing	25 mm

Material specifications

Color	white (RAL 9010)
Material	Steel
Coating	galvanized, white passivated

Standards and regulations

Connection in acc. with standard	IEC / EN
Tests	similar to EN 60715

Electrical tests

Short-time withstand current

Equivalent E-Cu cross-section	25 mm²
Short-time current resistance 1s	3 kA

Drawings

Dimensional drawing

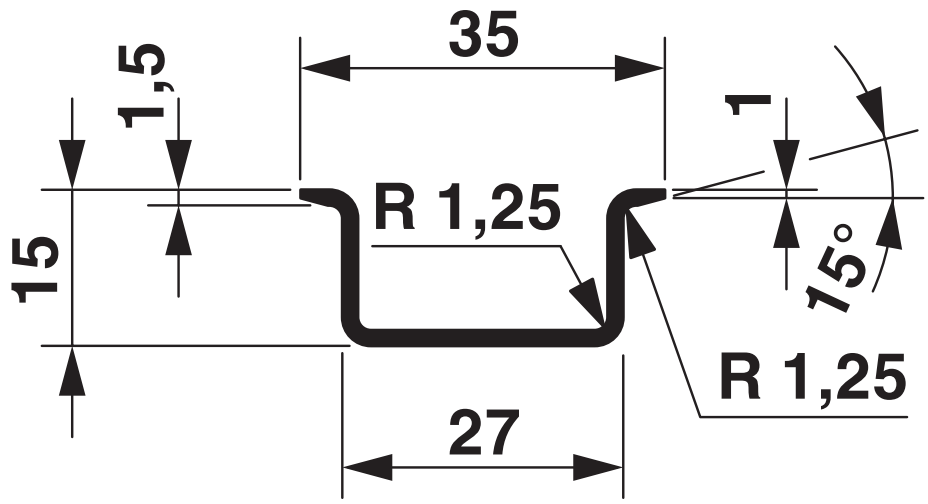

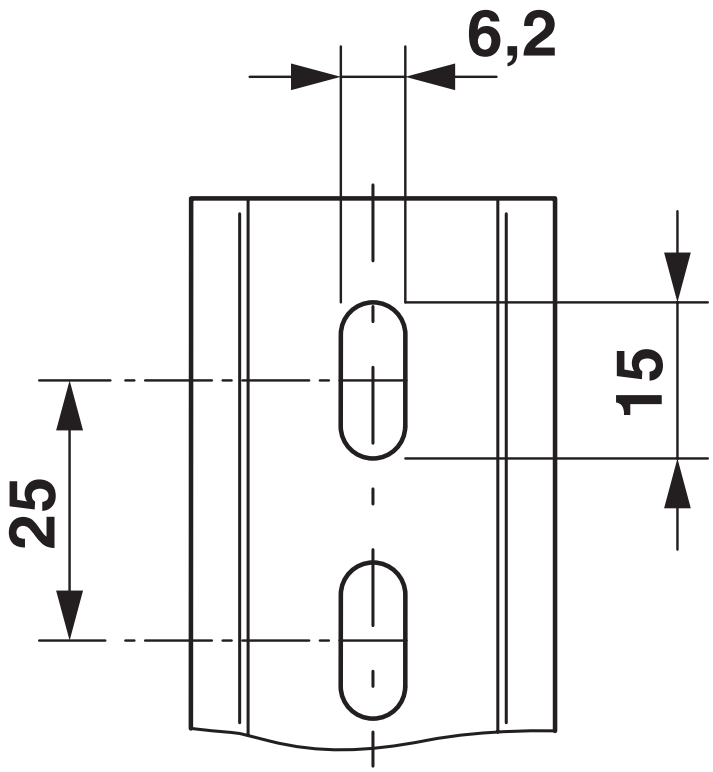

Classifications

ECLASS

ECLASS-13.0	27400602
ECLASS-15.0	27400602

ETIM

ETIM 10.0	EC001285

UNSPSC

UNSPSC 21.0	39121700

Environmental product compliance

EU RoHS

Fulfills EU RoHS substance requirements	Yes, No exemptions

China RoHS

Environment friendly use period (EFUP)	EFUP-E
	No hazardous substances above the limits

EU REACH SVHC

REACH candidate substance (CAS No.)	No substance above 0.1 wt%

EF3.1 Climate Change

CO2e kg	2.629 kg CO2e

Phoenix Contact 2026 © - all rights reserved
https://www.phoenixcontact.com

PHOENIX CONTACT Ltd
Halesfield 13, Telford
Shropshire, TF7 4PG
01952 681700
info@phoenixcontact.co.uk