AKG 16 BK - Connection terminal block

0423030

https://www.phoenixcontact.com/gb/products/0423030

Please be informed that the data shown in this PDF document is generated from our online catalog. Please find the complete data in the user documentation. Our general terms of use for downloads are valid.

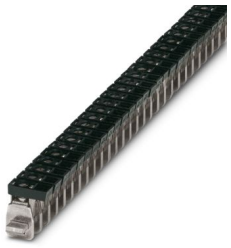

Connection terminal block, nom. voltage: 300 V, nominal current: 76 A, connection method: Screw connection, Rated cross section: 16 mm^2, cross section: 1.5 mm^2 - 16 mm^2, mounting: Neutral busbar, color: black

Commercial data

Item number	0423030
Packing unit	50 pc
Minimum order quantity	50 pc
Sales key	BE7331
Product key	BE7331
GTIN	4017918002015
Weight per piece (including packing)	10.495 g
Weight per piece (excluding packing)	10.495 g
Customs tariff number	85369010
Country of origin	IN

Technical data

Product properties

Product type	Installation terminal block
Number of connections	1
Number of rows	1

Electrical properties

Maximum load current	76 A (with 16 mm² conductor cross-section)
Maximum power dissipation for nominal condition	2.43 W
Nominal current I_N	76 A
Current carrying capacity of the neutral busbar	140 A

Connection data

Nominal cross section	16 mm²
Maximum load current	76 A (with 16 mm² conductor cross-section)

Level 1 above 1 below 1

Connection method	Screw connection
Screw thread	M5
Tightening torque	2.5 ... 3 Nm
Stripping length	16 mm
Conductor cross-section rigid	1.5 mm² ... 16 mm²
Cross section AWG	14 ... 6 (converted acc. to IEC)
Conductor cross-section flexible	1.5 mm² ... 16 mm²
Conductor cross-section, flexible [AWG]	14 ... 6 (converted acc. to IEC)
Conductor cross-section flexible (ferrule without plastic sleeve)	1.5 mm² ... 16 mm²
Flexible conductor cross-section (ferrule with plastic sleeve)	1.5 mm² ... 16 mm²
2 conductors with same cross section, rigid	1.5 mm² ... 6 mm²
2 conductors with same cross section, flexible	1.5 mm² ... 6 mm²
2 conductors with same cross section, flexible, with ferrule without plastic sleeve	1.5 mm² ... 6 mm²
2 conductors with the same cross section, flexible, with TWIN ferrule with plastic sleeve	1.5 mm² ... 10 mm²
Nominal cross section	16 mm²
Nominal current	76 A
Maximum load current	76 A (with 16 mm² conductor cross-section)
Nominal voltage	300 V

Dimensions

Dimensional drawing	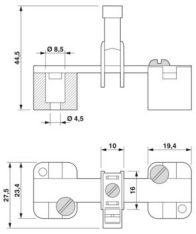
Width	9.8 mm
Height	23.4 mm
Depth	32 mm
Length	23.4 mm

Material specifications

Color	black (RAL 9005)
Flammability rating according to UL 94	V2
Insulating material	PA
Static insulating material application in cold	-40 °C
Temperature index of insulation material (DIN EN 60216-1 (VDE 0304-21))	125 °C
Relative insulation material temperature index (Elec., UL 746 B)	125 °C

Environmental and real-life conditions

Ambient conditions

Ambient temperature (operation)	-60 °C ... 110 °C (Operating temperature range incl. self-heating; for max. short-term operating temperature, see RTI Elec.)
Ambient temperature (storage/transport)	-25 °C ... 60 °C (for a short time, not exceeding 24 h, -60 °C to +70 °C)
Ambient temperature (assembly)	-5 °C ... 70 °C
Ambient temperature (actuation)	-5 °C ... 70 °C
Permissible humidity (operation)	20 % ... 90 %
Permissible humidity (storage/transport)	30 % ... 70 %

Mounting

Mounting type	Neutral busbar

Drawings

Dimensional drawing

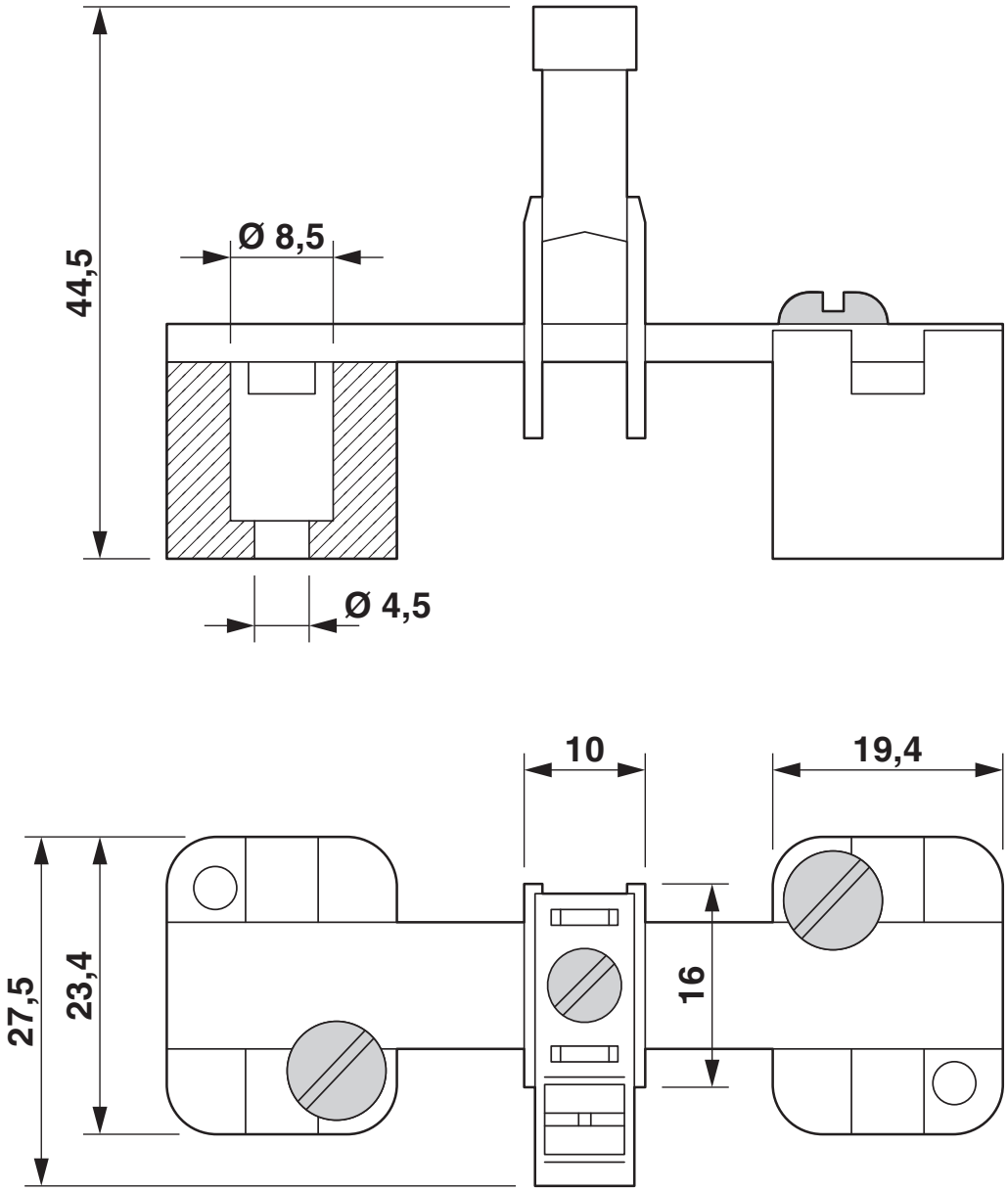

Dimensional drawing

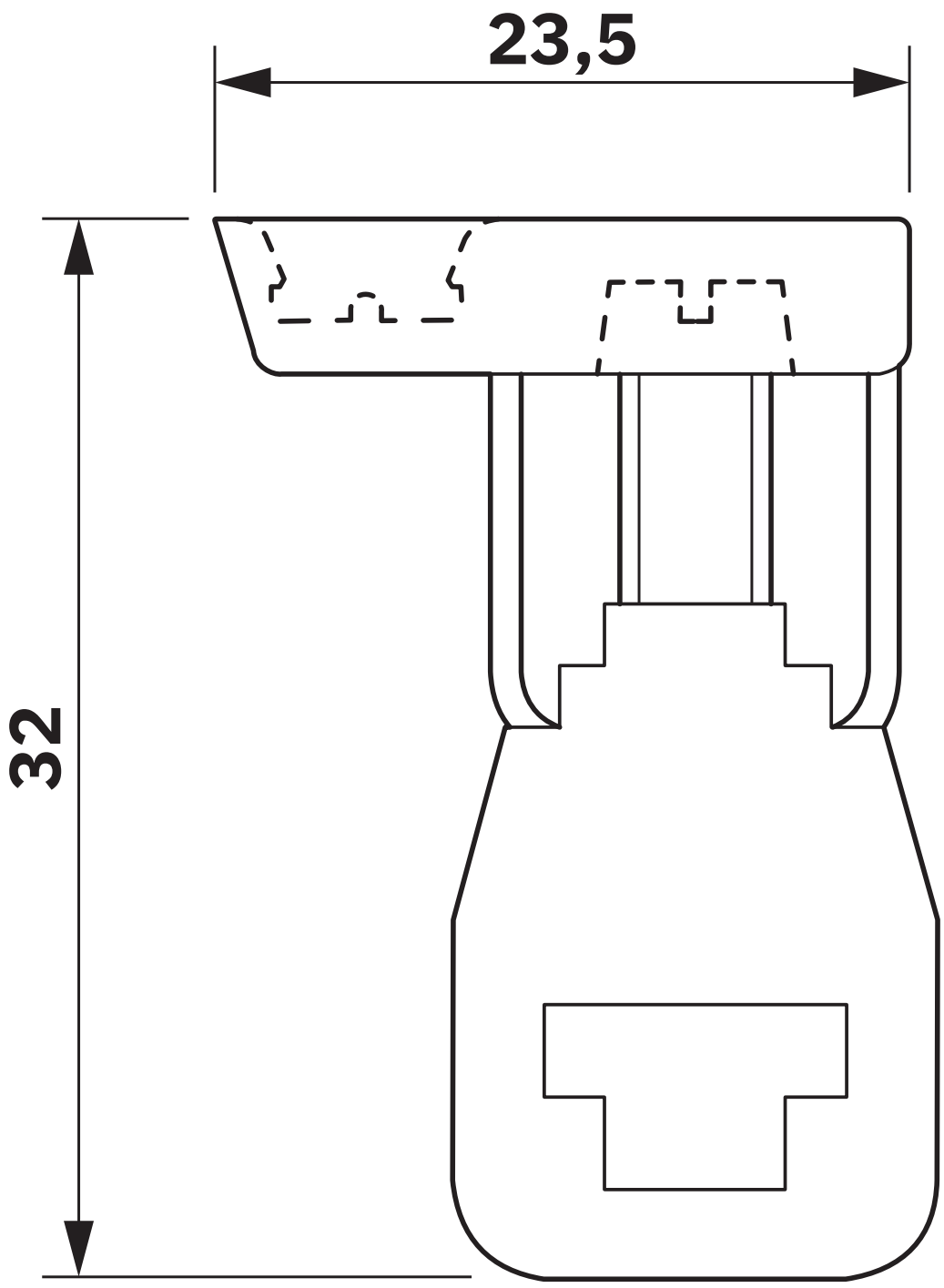

Approvals

To download certificates, visit the product detail page: https://www.phoenixcontact.com/gb/products/0423030

CSA
Approval ID: 13631

	Nominal voltage U_N	Nominal current I_N	Cross section AWG	Cross section mm^2
keine				
	-	65 A	18 - 6	-

UL Recognized
Approval ID: E60425

	Nominal voltage U_N	Nominal current I_N	Cross section AWG	Cross section mm^2
B				
	-	65 A	18 - 6	-
C				
	-	65 A	18 - 6	-
F				
	-	65 A	18 - 6	-

EAC
Approval ID: KZ7500651131219505

Classifications

ECLASS

ECLASS-13.0	27250116
ECLASS-15.0	27250116

ETIM

ETIM 10.0	EC000001

UNSPSC

UNSPSC 21.0	31162900

Environmental product compliance

EU RoHS

Fulfills EU RoHS substance requirements	Yes, No exemptions

China RoHS

Environment friendly use period (EFUP)	EFUP-E
	No hazardous substances above the limits

EU REACH SVHC

REACH candidate substance (CAS No.)	No substance above 0.1 wt%

Phoenix Contact 2026 © - all rights reserved
https://www.phoenixcontact.com

PHOENIX CONTACT Ltd
Halesfield 13, Telford
Shropshire, TF7 4PG
01952 681700
info@phoenixcontact.co.uk